Effective March 1, 2015

Dental Equipment Price List

Operatory Packages | Chairs | Delivery Systems | Lighting | Seating
Oral Surgery Products | Operatory Cabinetry | Sterilization Casework
Instrument Processing | Air Compressors and Vacuums | Imaging

MIDMARK 100 years 1915-2015

1-800-MIDMARK
midmark.com

Contents

General Information

Customer Experience 4
Warranty 5

Progeny Imaging Products

Policies 6
X-Ray Systems 7-11
Sensor Systems 12-13
Specifications and Requirements 14

Elevance® Operatory Equipment

Elevance® Console Operatory 16
Elevance® LR Operatory 16
Elevance® Procenter Console Operatory 17
Elevance® Procenter LR Operatory 17
Elevance® Dental Chair 18
Upholstery Selections 19
Elevance® Continental-Style Instrument Delivery Systems 20-22
Elevance® Traditional Instrument Delivery Systems 24-25
Elevance® Cuspidors 26
Elevance® Assistant's Instruments 27
Elevance® Monitor Mounts 28

Ultra Operatory Equipment

UltraComfort® Procenter Console Operatory 30
UltraComfort® Procenter LR Operatory 30
UltraTrim® Asepsis 21® Console Operatory 31
UltraComfort® - Asepsis 21® LR Operatory 31
UltraComfort® Dental Chair 32
UltraTrim® Dental Chair 32
UltraComfort® and UltraTrim® Upholstery Selections 33
Procenter Instrument Delivery Systems 34-49

Biltmore Operatory Equipment

Biltmore Asepsis 21® Console Operatory 50
Biltmore Asepsis 21® LR Operatory 50
Biltmore Classic Dental Chair 51
Biltmore LR Classic Dental Chair 52
Upholstery Selections 53
Asepsis 21® Instrument Delivery System 54-69

Lights/Monitors

Midmark Operating Lights 70-81

Stools

Dentist Stool 82
Assistant Stool 82

Accessories

Handpiece Illumination 84
Scalers 85
Electric Handpiece System 86
Curing Light 87
Intraoral Cameras 88
Junction Box 90-91
Tray Arm System and Remote Chair Control Kit 91

Contents

Oral Surgery

Midmark 641 Oral Surgery Chair 92-93
Midmark Exam Lights 94
Midmark Procedure Lights 95

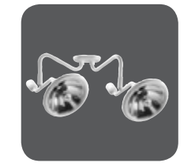

Instrument Processing

Integra™ Steri-Centers 96-97
Artizan® Expressions Streamline Centers 98-99
Midmark Sterilizers 100-102
Soniclean® Ultrasonic Cleaners 103-105

Air & Vacuum

Contents 106
Policies 107
PowerAir® Oil-less Air Compressors 108-109
PowerVac® G-Dry Vacuums 110-111
PowerVac® G System Packages and Operating Costs 112-113
PowerVac® Dry Vacuums 114-115
PowerAir®/PowerVac® System Packages 116
ClassicSeries® Wet-Ring Vacuums 117-118
PowerAir®/ClassicSeries® System Packages 119-120
Air Compressor Accessories 121
Amalgam Separator 122
Vacuum Accessories 123-125
Air Compressor and Vacuum Accessories 126-128
Power Max Surgical Vacuums 129-131

Midmark Operatory Cabinetry

Integra™ & Artizan® Expressions Description & Feature Highlights 132
Customer Experience and Ordering Notes 133

Integra™ Dental Casework

Contents 134
Colors 135
Freestanding Treatment Console 136-148
Freestanding Center Console 149-170
Freestanding Side Cabinet 171-188
Steri-Centers 189-195

Artizan® Expressions

Contents 196-197
Colors 198
Treatment Station 200-212
Echelon 213-216
Central Station 218-224
Side Station 225-234
Ortho 236-237
Streamline Center 238-241
Modular Components (Sterilization & Operatory) 242-245
Mobile Carts 246
X-ray Pass Through Insert 247

Dimensions

Midmark Equipment 248-275

Customer Experience

Midmark Customer Experience

Midmark Customer Experience Personnel are available to serve your needs between 8:00 AM - 5:00 PM Monday through Friday, EST.

1-800-MIDMARK
Fax: 1-877-725-6495

For equipment information or order placement, contact **Dental Customer Experience** by selecting Customer Service on our phone greeting, **ext. 88923.**

For SteriCenters and Casework order placement or information, contact **Casework Project Coordinators, ext. 88914.**

Midmark Technical Service

Midmark Technical Service Personnel are available to serve your needs between 8:00 AM - 5:00 PM Monday through Friday, EST
1-800-MIDMARK ext. 88913.

For Service Part identification, contact Technical Support on our phone greeting or fax your service parts or repair orders to **1-877-725-6495.**

Midmark Tech Service contact information:

Air Compressor and Vacuum Pump:	ext. 88890	airvac.ts@midmark.com
Integra Casework:	ext. 88875	casework.ts@midmark.com
Operatory:	ext. 88913	operatoryeq.ts@midmark.com
Seterilizer:	ext. 88854	sterilizers.ts@midmark.com
Imaging:	1-800-MIDMARK	imagingtechsupport@midmark.com

Ordering Notes (Integra™ and Artizan® specific ordering notes on page 133)

1. ORDERING - Please provide the following information on all orders:
   - Purchase order number
   - Bill to and ship to addresses
   - Product model and/or part number(s)
   - Product description
   - Upholstery color(s) and/or panel color(s)
   - Quantity needed
   - Pricing
   - Required shipping date
   - Signature of person placing the order
   - A signed copy of drawings (Integra™ Dental Casework and Artizan® Expressions Dental Furniture)

   Minimum Order - $35.

2. **SPECIAL DESIGN - Orders for equipment of special design, construction, finish or upholstery are not subject to cancellation after your acceptance of our acknowledgement.**

   Special design products, custom design cabinets and special upholstery WILL NOT be accepted for credit.

3. RETURN OF MERCHANDISE - Authorization must be obtained for the return of any item. If return is authorized, transportation charges must be prepaid. Items returned for credit are subject to a charge of 25% or more to cover inspection, reconditioning and repacking. Goods must be properly packaged and undamaged to receive proper credit.

   Note: Certain items are manufactured to order and are non-returnable, including Midmark Integra™ and Artizan® Casework, Upholstered items, Upholstery sets and Care Exchange™ Workstations.

4. FREIGHT DAMAGE - It is the consignee's responsibility to count and inspect upon receiving. Merchandise arriving with external damage should be described on Proof of Delivery, Delivery Receipt or Bill of Lading. In case of concealed damage, consignee must contact the carrier within 15 days after receipt and claims for damage instituted.

5. IMPROVE PRODUCT QUALITY - Midmark Corporation reserves the right to change design and construction without notice.

6. **ORDER CHANGES - Any requested changes to an order within 5 days of the scheduled/acknowledged ship date will result in an extension to the scheduled ship date. The new ship date will be rescheduled/ acknowledged based on the extent of the changes requested.**

7. **CASEWORK ORDER CHANGES - Any changes made after the receipt of an order may incur a change fee. This fee will cover materials, labor and handling cost. All changes must be submitted in writing. Upon review and approval of changes, the order will be moved to the next available ship date.**

8. ORDER CANCELLATION - Any order if cancelled within 10 days before the scheduled shipping date will be charged a 20% cancellation charge.

9. SPECIAL ORDER REQUIREMENTS - Any order requiring special deviation from standard products will carry the following disclaimer:

We hereby accept and acknowledge the above captioned order provided, however, because of the special nature of this order in that this equipment is being supplied upon special design specifications, special materials and/or field modification, as per your request, the standard warranties of Midmark on its products are not applicable to the order, and this acceptance and acknowledgement is conditioned upon your indemnification and promise to hold Midmark, its officers, employees and agents, harmless in respect to any and all warranty claims, damages, both direct and consequential, expenses, costs and any liability arising from the use of or relating to this special equipment.

BACK TO CONTENTS

Warranty

1. **SCOPE OF WARRANTY**
   Midmark Corporation ("Midmark") warrants to the original purchaser its Dental products and components (except for components not warranted under "Exclusions") manufactured by Midmark to be free from defects in material and workmanship under normal use and service. Midmark's obligation under this warranty is limited to the repair or replacement, at Midmark's option, of the parts or the products the defects of which are reported to Midmark within the applicable warranty period and which, upon examination by Midmark prove to be defective.

2. **APPLICABLE WARRANTY PERIOD**
   The applicable warranty period, measured from the date of delivery to the original user, shall be as follows:

   (1) DENTAL PRODUCTS are warranted against defect in material and workmanship for the period indicated below from the time of delivery:
   - (a) Two (2) years for all products and components (except for the periods in b through e).
   - (b) "KINK-VALVE" module carries a ten (10) year warranty.
   - (c) The original light bulb on a new light carries a one (1) year warranty.
   - (d) Accessories not manufactured by Midmark are excluded.
   - (e) Replacement parts and accessories carry a ninety (90) day warranty.

   (2) ORAL SURGERY PRODUCTS are warranted against defect in material and workmanship for a period of one (1) year from the time of delivery.

   (3) STERILIZER PRODUCTS are warranted against defect in material and workmanship for a period of one (1) year from the time of delivery.

   (4) ULTRASONIC CLEANER PRODUCTS when used in accordance with manufacturer's instructions and under normal use, are guaranteed for two (2) years after date of shipment. Within the period guaranteed, the manufacturer will repair or replace free of charge, at its sole discretion, all parts that are defective because of material or workmanship including costs for removing or installing parts. Repairs are made on a FOB repair depot basis. Manufacturer's liability, whether based on warranty, negligence or other cause, arising out of and/or incidental to sale, use or operation of the transducer elements, or any part thereof, shall not in any case exceed the cost of repair or replacement of the defective equipment, and such repair or replacement shall be the exclusive remedy of the purchaser, and in no case shall manufacturer be responsible for any and/or all consequential or incidental damages including without limitation, and/or all consequential damages arising out of commercial losses.

   (5) AIR AND VACUUM PRODUCTS
   - (a) PowerAir® oil-less compressors – Five (5) years or 3,500 hours of use, whichever occurs first.
   - (b) PowerVac® and PowerVac® G dry vacuums – Five (5) years or 10,000 hours of use, whichever occurs first (except that the vacuum pump warranty term is ten (10) years or 20,000 hours of use, whichever occurs first).
   - (c) Classic Series® wet-ring vacuums – Five (5) years or 10,000 hours of use, whichever occurs first.
   - (d) PowerMax surgical suction – Two (2) years.
   - (e) Hg5 Series Amalgam Separator - One (1) year.
   - (f) Midmark manufactured accessories - One (1) year.

   (6) INTEGRA™ DENTAL CASEWORK AND ARTIZAN® EXPRESSIONS PRODUCT are warranted against defect in material and workmanship for the period indicated below from the time of delivery:
   - (a) Five (5) years for all products and components except for the shorter periods in (b), (c) and (d), including door and drawer fronts, casters and slides.
   - (b) Three (3) years for electrical components such as task lights/LED light and cords and controls.
   - (c) Two (2) years for sliding track monitor mount and components and upholstery.
   - (d) One (1) year for countertops and resin, including accessories.

3. **EXCLUSIONS**
   This warranty does not cover and Midmark shall not be liable for the following;

   (1) repairs and replacements because of misuse, abuse, negligence, alteration, accident, freight damage or tampering;
   (2) matching of color, grain or texture except to commercially acceptable standards;
   (3) changes in color caused by natural or artificial light;
   (4) products which are not installed, used and properly cleaned as required in the Midmark "Installation" and or "Installation/Operation" Manual for this applicable product;
   (5) products considered to be of a consumable nature;
   (6) accessories or parts not manufactured by Midmark;
   (7) specially manufactured products;
   (8) charges by anyone for adjustments, repairs, replacement parts installation or other work performed upon or in connection with such products which is not expressly authorized in writing in advance by Midmark.

4. **EXCLUSIVE REMEDY**
   Midmark's only obligation under this warranty is the repair or replacement of defective parts. Midmark shall not be liable for any direct, special indirect, incidental, exemplary or consequential damages or delay including, but not limited to, damages for loss of profits or loss of use.

5. **NO AUTHORIZATION**
   No person or firm is authorized to create for Midmark any other obligation or liability in connection with the products.

   THIS WARRANTY IS MIDMARK'S ONLY WARRANTY AND IS IN LIEU OF ALL OTHER WARRANTIES, EXPRESSED OR IMPLIED. MIDMARK MAKES NO IMPLIED WARRANTIES OF ANY KIND, INCLUDING ANY WARRANTIES OF MERCHANTABILITY OR FITNESS FOR ANY PARTICULAR PURPOSE. THIS WARRANTY IS LIMITED TO THE REPAIR OR REPLACEMENT OF DEFECTIVE PARTS.

BACK TO CONTENTS

Warranty Information

Product is warranted to be free from defects in material and manufacturing workmanship by Midmark for a period of 24 months from the date of purchase or 30 months from the date of shipment from Midmark. For complete warranty information, contact Midmark at 1-800-MIDMARK

Arm Exchange Program

Midmark supports an exchange plan for the horizontal arm in cases when the wrong length has been ordered and shipped. The program covers new purchases only and the exchange must be made within 30 days of the sale to the customer.

Procedure: Contact Midmark Customer Experience and request an Arm Exchange. The serial number of the X-ray must be provided at the time the request is made. Customer Experience will issue a Return Authorization for the original horizontal arm. A purchase order for the arm length desired referencing the RA number must be sent into Midmark. The original horizontal arm must be returned undamaged. Any arms received damaged will be billed.

All freight charges are the responsibility of the dealer.

Preva Plus - Integrated Intraoral X-ray and ClearVision® Digital Sensor

*Preva Plus combines a high frequency intraoral X-ray system and the ClearVision® high resolution digital sensor for the ultimate in digital convenience. System includes the ClearVision® digital sensor with High Speed USB 2.0 connectivity, storage on the arm, Progeny® Imaging Software and all the features of the Preva DC. System available in 56", 66", 76" and 82" *arm lengths or mobile system. Two-year warranty for the X-ray and the sensor.*

**Sold exclusively with double stud mount.*

Preva Plus with #1 Sensor

Part #	Description	Suggested Retail USD $
DCD7-G1N/S1	76" arm, single stud mount	$16,100.00
DCD6-G1N/S1	66" arm, single stud mount	16,100.00
DCD5-G1N/S1	56" arm, single stud mount	16,100.00
DCD8-G2N/S1	82" arm, double stud mount*	16,430.00
DCD7-G2N/S1	76" arm, double stud mount.	16,255.00
DCD6-G2N/S1	66" arm, double stud mount	16,255.00
DCD5-G2N/S1	56" arm, double stud mount	16,255.00

Preva Plus with #2 Sensor

Part #	Description	Suggested Retail USD $
DCD7-G1N/S2	76" arm, single stud mount	$17,145.00
DCD6-G1N/S2	66" arm, single stud mount	17,145.00
DCD5-G1N/S2	56" arm, single stud mount	17,145.00
DCD8-G2N/S2	82" arm, double stud mount*	17,475.00
DCD7-G2N/S2	76" arm, double stud mount	17,300.00
DCD6-G2N/S2	66" arm, double stud mount	17,300.00
DCD5-G2N/S2	56" arm, double stud mount	17,300.00

Combination System with #1 and #2 Sensor

Part #	Description	Suggested Retail US $
DCD7-G1N/SB	76" arm, single stud mount	$26,335.00
DCD6-G1N/SB	66" arm, single stud mount	26,335.00
DCD5-G1N/SB	56" arm, single stud mount	26,335.00
DCD8-G2N/SB	82" arm, double stud mount*	26,665.00
DCD7-G2N/SB	76" arm, double stud mount	26,490.00
DCD6-G2N/SB	66" arm, double stud mount	26,490.00
DCD5-G2N/SB	56" arm, double stud mount	26,490.00

Preva Plus Mobile

Part #	Description	Suggested Retail US $
DCDM-GON/H/S1	Mobile with #1 sensor	$18,065.00
DCDM-G0N/H/S2	Mobile with #2 sensor	19,110.00

Preva 2.0 Intraoral X-ray System

*Preva 2.0 has all of the features of the Preva DC intraoral x-ray system today and is ready to use the ClearVision® digital sensor when the clinic is ready to move to digital. A High Speed USB 2.0 connector on the elbow is ready for sensor plug in. System available in 56", 66", 76" and 82" *arm lengths or mobile system. Two-year warranty.*

**Sold exclusively with double stud mount.*

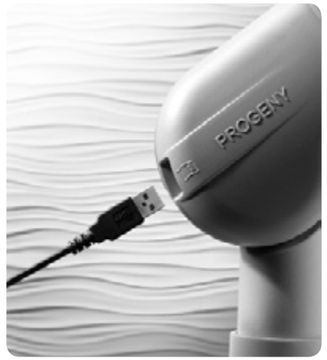

Part #	Description	Suggested Retail US $
DCD7-G1N	76" arm, single stud mount.	$6,140.00
DCD6-G1N	66" arm, single stud mount	6,140.00
DCD5-G1N	56" arm, single stud mount	6,140.00
DCD8-G2N	82" arm, double stud mount*	6,470.00
DCD7-G2N	76" arm, double stud mount	6,295.00
DCD6-G2N	66" arm, double stud mount	6,295.00
DCD5-G2N	56" arm, double stud mount	6,295.00
DCDM-GON/H	Mobile	8,280.00

ClearVision® Integrated Digital Sensor System

Add the ClearVision® Digital Sensor to your Preva 2.0. System includes Progeny ClearVision® sensor with .9m cable, USB drive with Progeny® Imaging Software, Sensor calibration files, documentation kit and user manual, sample sheath pack and Rinn XCP-DS Fit Positioning Guide Holder.

Part #	Description	Suggested Retail US $
XSDN-01	Progeny ClearVision® Digital Sensor System Size 1 sensor	$11,250.00
XSDN-02	Progeny ClearVision® Digital Sensor System Size 2 sensor	$12,475.00

Preva DC Intraoral X-ray System

*Preva DC is a high frequency intraoral X-ray system that provides exceptional image quality. The system includes a unique LCD display; 30 pre-programmed technique settings; 0.4mm focal spot; adjustable kV, mA and time settings; and an ergonomic tubehead handle and operator control panel that can be mounted remotely. The system is available in 56", 66", 76" and 82" *arm lengths. The smooth, drift-free arm is balanced in the factory, and a proprietary braking system provides drift-free positioning. Compatible with digital receptors and standard and high speed films. Two-year warranty.*
**Sold exclusively with double stud mount.*

Specifications

Line Voltage	100-230VAC +/– 10% 50-60 Hz	Cone Length	8 in (20 cm)
Max Line Selections	5 amps	Focal Spot	0.4 mm
kV Range	60, 65, or 70 kVp	Duty Factor	1:15
mA Range	4, 5, 6, or 7 mA	Shipping Weight	95 lb (wall unit), 330 lb (mobile unit)
Exposure Time Selections	20 ms to 2 seconds	Applicable Documents	Federal Regulations 21 CFR, UL, CE 0120
Minimum Inherent Filtration	2 mm Al equivalent @ 70 kV	Warranty	2 Years, Limited

Part #	Description	Suggested Retail US $
P7017	76" arm, single stud mount	$5,770.00
P7016	66" arm, single stud mount	5,770.00
P7015	56" arm, single stud mount	5,770.00
P7018-P	82" arm and 16" two stud mounting plate*	6,100.00
P7017-P	76" arm and 16" two stud mounting plate	5,925.00
P7016-P	66" arm and 16" two stud mounting plate	5,925.00
P7015-P	56" arm and 16" two stud mounting plate	5,925.00
P7017GM	Preva DC Mobile System	7,910.00

Preva Plus, Preva 2.0 and Preva are available as mobile units.

Options

Exposure Hand Switch
Choice of 56", 66", 76" or 82"* (total reach)
- *Sold exclusively with double stud mount

Remote Exposure Stations
Two Stud Mounting Plate
Metal Stud Mounting Plate

BACK TO CONTENTS

Accessories

Part #	Description	Suggested Retail US $
30-08101	Doorbell-type Exposure Station	$76.00
30-A2040	Handswitch with 25' cable	114.00
30-A2044	Lighted Remote Exposure Station (with interconnect cable)	199.00
30-A2114	Preva Dual Operator Panel Kit	533.00
30-08110	Lighted Remote Exposure Station	76.00
30-A2042	Two Stud Mounting Plate	170.00
30-A2099	4 X 4 Pass-Through Kit	95.00
30-A2043	Metal Stud Mount	285.00

Description	BLD Cone Assy. Part#	BLD Cone Assy.	Retail
Modular BLD, 70 mm Cone, Gray	30-A2195		48.70
Modular BLD, 70 mm Cone, Long, Gray	30-A2200		115.00
Modular BLD, 60 mm Cone, Long, Gray	30-A2229		115.00
Modular BLD, 35×45 mm Cone, Gray	30-A2221	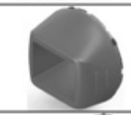	69.70
Modular BLD, 35×45 mm Cone, Long, Gray	30-A2223	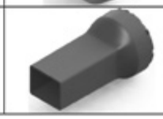	185.00

Note: 30-A2195 and 30-A2221 are included with Preva systems.

Replacement Arms

Part #	Description	Suggested Retail US $
30-A2212	Preva Plus - 34 5/8" (76" total reach) - long	$705.00
30-A2211	Preva Plus - 24 5/8" (66" total reach) - short	637.00
30-A2210	Preva Plus - 14 5/8" (56" total reach) - compact	662.00
30-A2071	Preva - 34 5/8" (76" total reach) - long	778.00
30-A2073	Preva - 24 5/8" (66" total reach) - short	762.00
30-A2074	Preva - 14 5/8" (56" total reach) - compact	736.00

BACK TO CONTENTS

Sensor Systems

ClearVision® Digital Sensor System

ClearVision® makes digital practice integration simple while delivering high quality images in a durable, patient friendly design. With direct USB 2.0 connection, there is no need for docking stations or adapters. Advanced CMOS technology optimizes resolution producing sharp, detailed images for immediate diagnosis. Rounded corners and thin profile provide for patient comfort. ClearVision® is available in two sizes to best accommodate patient needs and examination requirements.
Two-year warranty

Part #	Description	Suggested Retail US $
XSDS-01	Progeny ClearVision® Digital Sensor System, Size 1 sensor	$11,250.00
XSDS-02	Progeny ClearVision® Digital Sensor System, Size 2 sensor	12,475.00
XSDS-0B	Progeny ClearVision® Digital Sensor System, Size 1 and Size 2 sensors	21,600.00

System includes: Progeny ClearVision® Digital Sensor with 3 meter cable, USB drive with Progeny®Imaging software, sensor calibration file and documentation kit with user manual, sample sheath pack and Rinn XCP-DS Fit positioning guide holder.

ClearVision® Laptop Suite

Part #	Description	Suggested Retail US $
XSDS-01/L	Progeny ClearVision® Digital Sensor System with Laptop, Size 1 sensor	$12,685.00
XSDS-02/L	Progeny ClearVision® Digital Sensor System with Laptop, Size 2 sensor	$13,910.00
XSDS-0B/L	Progeny ClearVision® Digital Sensor System with Laptop, Size 1 and Size 2 sensors.	$23,035.00

A seamless method for a clinic to switch to digital, the ClearVision® Laptop Suite includes the ClearVision® Digital Sensor system along with a laptop pre-configured for your Progeny ClearVision® Sensor. The laptop is pre-loaded with Progeny® Imaging software, Progeny Device Suite including a TWAIN client and the paired ClearVision® sensor calibration files.

See Specifications and Network Requirements on page 14 for additional details.

Sensor Care and Accessories

Sensor Safe Extended Care Plan:

Sensor Safe Extended Care Plan is a comprehensive extended care plan for the Progeny ClearVision® intraoral sensor. ClearVision® sensors come standard with a two year warranty covering failure or malfunction due to normal use. With the purchase of the Sensor Safe Extended Care Plan, the ClearVision® sensor is covered for a period of five years for failure or malfunction. Contact Midmark Customer Experience for the Sensor Safe Extended Care Plan details.

Specifications and Requirements

Progeny® Imaging Operating System Requirements

Operating System	Microsoft Windows 8 Pro or Enterprise Editions (32 or 64 bit), Microsoft Windows 7® Ultimate or Professional (32 or 64 bit) or Microsoft Vista® Business or Ultimate (32 or 64 bit) or Microsoft Windows XP® Professional (SP3) or Intel®-based Apple® running Windows Platform
Processor	Intel (or x86 compatible) Single Core 2 GHz or better (or Dual Core at 1.7 GHz recommended)
Memory	2 GB RAM (minimum), 3 GB RAM (recommended)
Storage	80 GB Hard Drive (minimum)
CD/ DVD	48x CDRW (minimum), 16x DVD+/-RW (recommended)
Video	32 bit, 1024 x 768 resolution capable (recommended)
Ports	Two High Speed USB 2.0

A back-up storage device is recommended (DVD, external hard drive, other).
NOTE: Microsoft 8, Microsoft 8 RT, Microsoft Windows 7® Home Premium, Microsoft Windows Vista® Home Basic or Home Premium and Microsoft XP® Home, and Tablet PC Editions are NOT recommended. For additional information, please contact Midmark Technical Support at 1-800-MIDMARK, imagingtechsupport@midmark.com or visit midmark.com/support.

Progeny Vantage® Panoramic Network Requirements

All communication components within the dental practice or facility network are required to operate at the rate of 100 megabits per second or higher. For additional information, please contact Midmark Technical Support at 1-800-MIDMARK, imagingtechsupport@midmark.com, or visit midmark.com/support.

ClearVision® Laptop Suite Specifications

The ClearVision Laptop meets the below minimum specifications.

Operating System	Microsoft Windows 7® Ultimate or Professional
Processor	Intel Core Duo/i5/i7 performing at a minimum of 2 GHz
Memory	3 GB DDR/DDR2/DDR3 RAM minimum
Graphics Controller	Capable of minimum 1024 x 768 resolution
Monitor	LED Backlit display with a size of at least 13" and no more than 15.8"
Ports	At least two High Speed USB 2.0 available
Network Controller	Ethernet at a speed of 10/100 minimum
Wireless Network Controller	802.11 g/n minimum
Weight	No more than 10 lb

Specifications and requirements are subject to change without notice.

Notes

Elevance® Operatories

Elevance® Console Operatory

Elevance® LR Operatory

Elevance® Console Operatory

Part #	Description	Price
153810-002	Elevance® Console Chair (Umbilical 4 ft., Console Mount and Power Supply)	$12,941
ULTRA-E	Upcharge for Elevance Ultraleather™ Upholstery	755
153800-011	6 Position Console Mounted Delivery System*	9,920
153802CE	Assistant's Instrument Unit, Console Mount	1,910
153804C-003	Console Mounted Cuspidor, Blue Bowl	1,960
153818-001	Midmark Console Mount Operating Light - Elevance	2,825
	Total	**$30,311**

**Delivery Unit shown includes additional accessories not included in price*

Elevance® LR Operatory

Part #	Description	Price
153810-003	Elevance® LR Chair (Umbilical 4 ft., LR Unit Mount and Power Supply)	$12,941
ULTRA-E	Upcharge for Elevance Ultraleather™ Upholstery	755
153800-010	6 Position Elevance LR Delivery System*	8,860
153802LR	Assistant's Instrument Unit, Rear Chair Hub Mount	2,015
153818-002	Midmark LR Operating Light - Elevance	2,825
	Total	**$27,396**

**Delivery Unit shown includes additional accessories not included in price*

Elevance® – Procenter Operatories

Elevance® - Procenter Console Operatory

Elevance® - Procenter LR Operatory

Elevance® – Procenter Console Operatory

Part #	Description	Price
153810-002	Elevance® Console Chair with Internal Umbilical, Console Mount and Power Supply	$12,941
ULTRA-E	Upcharge for Elevance Ultraleather™ Upholstery	755
153600-021	Procenter Console Mounted Instrument Delivery System	8,393
153603C	Cuspidor, Console Mounted	1,539
153604LR-E	Assistant's Instrument, Rear Chair Hub Mount	1,830
153818-004	Midmark Console Mount Operating Light	2,825
	Total	**$28,283**

Elevance® – Procenter LR Operatory

Part #	Description	Price
153810-003	Elevance® LR Chair with Internal Umbilical, LR Mount and Power Supply	$12,941
ULTRA-E	Upcharge for Ultraleather™ Upholstery	755
153600-020	LR Procenter Instrument Delivery System	7,427
153604LR-E	Assistant's Instruments, Rear Chair Hub Mount	1,830
153818-003	Midmark, LR Operating Light	2,825
	Total	**$25,778**

**Procenter options and accessories start on page 35*

Elevance® Dental Chair

Standard Features

- For use with Elevance™ and Procenter Instrument Delivery Systems
- Cantilever Forward® Design
- Unsurpassed Range of Travel for Greater Flexibility
- Supports Patients up to 450 lb
- Integrated Armrests for Full Support and Ease of Entry/Exit
- Cast Aluminum Backrests for Greater Support and Patient Confidence
- Backrest is Thin and Narrow for Optimal Access
- Double Articulating Headrest
- Electronic Chair Rotation Release Pedals
- Chair Swivels 76°, LR and Console Chairs 30°
- Console and LR Chairs include Power Supply
- Programmable 4 Position Foot Switch Chair Control (included with chair only, optional with LR and Console chairs)
- Seamless, Royal Hampton Upholstery

Part #	Description	Price
153810-001	Elevance® Chair	$11,611
153810-002	Elevance® Console Chair (umbilical 4 ft., Console unit mt. and pwr. supply)	12,941
153810-003	Elevance® LR Chair (umbilical 4 ft., LR unit mt. and pwr. supply)	12,941
Options:		
ULTRA-E	Upcharge for Ultraleather™ Upholstery (plush or limited seams)	755/chair
UPCHG-E	Upcharge for Non-Standard Upholstery Colors and/or two-toned Ultraleather™ Upholstery (two-toned upholstery: identify primary and accent colors, available in traditional and pearlized Ultraleather™ only)	379/chair
153836-001	SerenEscape® Heat & Massage System (not available in Royal Hampton or limited seams Ultraleather™) (A)	976
153816-003	2 Position Programmable Foot Switch Chair Control	368
153816-006	4 Position Programmable Foot Switch Chair Control (included w/ chair only)	368
153816-001	Wireless Programmable Chair Control (up to two controls available) (B)	408/each
154134	Double Articulating Magnetic Headrest (less headrest tang) (Note: can be substituted for the standard double articulating for an additional $117) (C)	627
153815-002	4 ft. Additional Length Umbilical (total 8 ft.) for LR Chair	350
153814-002	4 ft. Additional Length Umbilical (toatl 8 ft.) for Console Chair	350
153819-002	Air and Water Quick Disconnects (available only on LR and Console chairs)	205
153842-001	Console Chair Deduct (includes console unit mount for 2" OD round post, excludes internal umbilical and universal power supply)	(815)
002-1877-00	Light mount arm assembly (for 2" OD round post)	418
153795-002	Upcharge for Deluxe Rheostat with Chip Air, Std. Length	39
153795-004	Upcharge for Deluxe Rheostat with Chip Air, Extra Length	39

A: SerenEscape® Controller

B: Wireless Programmable Chair Control

C: Double articulating Magnetic Headrest (Interchangeable)

BACK TO CONTENTS

Upholstery Selections

Elevance® Dental Chairs

ROYAL HAMPTON offers a durable, seamless upholstery complemented with an antimicrobial treatment.

Color

656 Parchment
657 Greige
658 Iris
659 Forest Green
660 Saddle
661 New Burgundy
662 Columbine
663 Spanish Tile
668 Sage
669 Taupe
670 Black

Replacement Upholstery

Part #	Description	Price
154124-xxx	Elevance® Chair	$1,222
154132-xxx	Double Articulating Headrest	567
154129-xxx	Double Articulating Magnetic Headrest	685

All Midmark dental fabrics are selected for extreme durability, easy cleanability and richness of feel. Standard colors are subject to change without notice. Please refer to a current Midmark upholstery selection chart.

ULTRALEATHER™ offers beautiful, luxurious, soft surfaces with exceptional durability.

Color

458 Abalone
401 Admiral
262 Apricot
244 Arctic
748 Bamboo
722 Bayou
368 Cashmere
750 Charcoal
723 Cyan
371 Eucalyptus
751 Fudge
743 Grenadine
746 Hide
727 Hot Sauce
749 Lake
747 Lemon
602 Mandarin
398 Mica
326 Midnight
395 Milkweed
369 Nile
227 Papyrus
729 Parrot
618 Pewter
217 Plum
228 Raven Wing
400 Riviera
740 Silk
732 Silver Pearl
733 Sorbet

Replacement Upholstery

Part #	Description	Price
154125-xxx	Elevance® Chair - Plush	$1,977
154138-xxx	Elevance® Chair - Plush/Massage	2,953
154128-xxx	Elevance® Chair - Two-toned*	2,356
154140-xxx	Elevance® Chair - Two-toned/ Massage*	3,331
154127-xxx	Elevance® Chair - Limited Seams	1,977
154133-xxx	Double Articulating Headrest	567
154130-xxx	Double Articulating Magnetic Headrest	685

* Identify primary and accent colors for two-toned upholstery, available in traditional and pearlized Ultraleather only.

BACK TO CONTENTS

Integration Control Module™ controls electric and pneumatic handpieces

Fourth generation, patented Kink Valves

Kink Valve™ 10 Year Warranty

Standard Features

- ICM
- Automatic Kink Valve handpieces
- Straight 4-hole handpiece tubing
- Syringe with autoclavable tip
- Individual water volume valve adjustment
- Individual air pressure valve adjustment
- Handpiece exhaust oil collector
- Handpiece flush system
- Self contained water system with 1 liter bottle
- Counter balanced flex arm
- Contoured junction box
- Powered USB port (1A @ 5VDC)
- Software upgradeable display

Elevance™ Continental-Style Instrument Delivery Systems

Elevance™ Continental Delivery Systems

Part #	Description	Price
153800-020	Elevance® LR Continental Delivery System	$9,780
153800-021	Elevance® Console Mounted Continental Delivery System	$11,020

Factory Installed Options:

153775-002	City Water Selector Valve for use with LR unit	155
153775-004	City Water Selector Valve for use with Console Unit	155
153775-005	2 Liter bottle option for LR Unit (includes two bottles)	35
153775-006	2 Liter bottle option for LR Unit with City Water Selector	190
153775-007	2 LIter bottle option for Console Unit (includes two bottles)	35
153775-008	2 Liter bottle option for Console Unit with City Water Selector	190

Syringe Options

153917-001	Second Syringe	170
153917-002	Heated Dentist's Syringe (in lieu of standard syringe)	321
153918-001	Autoclavable Standard Syringe (in lieu of standard syringe)	290
153918-002	Autoclavable Heated Syringe (in lieu of standard syringe)	363

Air Driven Options (for more information, go to Accessories on page 84)

153777-001	Handpiece Illumination System	514
153919-002	Tubing for ISO-C Fiber Optic Handpiece	329
153919-003	Tubing and Lamp for Fiber Optic Handpiece	399

Scaler Options

153922-001	SATELEC® SP Newtron Ultrasonic Scaler	2,129
153922-002	SATELEC® SP Newtron L.E.D. Ultrasonic Scaler	2,918
153921-001	Dentsply Cavitron Ultrasonic Scaler	2,833

Electric Motor Options

153920-001	Bien Air MX2 LED, Single Motor System	4,416
153920-002	Bien Air MX2 LED, Dual Motor System	7,288

Intraoral Camera Docking Station

153831-009	SOPRO® Camera USB2 Docking Station	2,472

Curing Light Options

153924-001	SATELEC® Mini LED Curing Light	1,645

Dealer Installed Options

153778-001	Continental-Style Standard Tray Holder (includes 9” x 13” stainless steel instrument tray) “A”...410
153778-002	Continental-Style Small Tray Holder (includes autoclavable instrument panel) “B”.....330
153778-003	Continental-Style Large Tray Holder (includes autoclavable instrument panel) “C”.....410

A.

B.

C.

Intraoral Camera Options (SOPRO® cameras require docking station)

153831-001	Sopro 617 Camera 3,955
153831-006	Sopro 717 First Camera.....4,707
153831-005	SoproLIFE® Camera.....6,739
153831-012	SoproCARE® Camera 6,739

Integration Control Module™ controls electric and pneumatic handpieces

Fourth generation patented Kink Valves

Kink Valve™ 10 Year Warranty

Standard Features

- ICM
- Automatic Kink Valve Handpieces
- Straight 4-hole Handpiece Tubing
- Syringe with Autoclavable Tip
- Individual Water Volume Needle Valve Adjustment
- Individual Air Pressure Needle Valve Adjustment
- Handpiece Exhaust Oil Collector
- Handpiece Flush System
- Self Contained Water System with 1 Liter Bottle
- Counter Balanced Flex Arm
- Contoured Junction Box
- Instrument Tray (9" X 13") and Autoclavable Instrument Pad
- Powered USB Port (1A @ 5VDC)
- Software Upgradeable Display

Elevance™ Traditional Instrument Delivery Systems

Elevance™ Traditional Instrument Delivery Systems

Part #	Description	Price
153800-010	6 Position Elevance® LR Delivery System	$8,860
153800-012	4 Position Elevance® LR Delivery System	8,485
153800-011	6 Position Elevance® Console Mounted Delivery System	9,920
153800-013	4 Position Elevance® Console Mounted Delivery System	9,545

Factory Installed Options:

153607EC	Delete Handpiece Position	-400
153775-002	City Water Selector Valve for use with LR unit	155
153775-004	City Water Selector Valve for use with Console unit	155
153775-005	2 Liter bottle option for LR Unit (includes two bottles)	35
153775-006	2 Liter bottle option for LR Unit with City Water Selector	190
153775-007	2 LIter bottle option for Console Unit (includes two bottles)	35
153775-008	2 Liter bottle option for Console Unit with City Water Selector	190

Syringe Options

153854-001	Second Syringe	170
153854-002	Heated Dentist's Syringe (in lieu of standard syringe)	321
153779-001	Autoclavable Standard Syringe (in lieu of standard syringe)	290
153779-002	Autoclavable Heated Syringe (in lieu of standard syringe)	363

Air Driven Options (for more information, go to Accessories on page 84)

153777-001	Handpiece Illumination System	514
153780-002	Tubing for ISO-C Fiber Optic Handpiece	225
153780-003	Tubing and Lamp for Fiber Optic Handpiece	290

Scaler Options

153782-001	SATELEC® SP Newtron Ultrasonic Scaler	2,129
153782-002	SATELEC® SP Newtron LED Ultrasonic Scaler	2,918
153781-001	Dentsply Cavitron Ultrasonic Scaler	2,833

Electric Motor Options

153776-001	Bien Air MX2 LED, Single Motor System	4,416
153776-002	Bien Air MX2 LED, Two Motor System	7,288

Intraoral Camera Docking Station

153831-010	SOPRO® Camera USB2 Docking Station	2,472

Curing Light Options

153784-001	SATELEC® Mini LED curing light	1,645

Dealer Installed Options:

Intraoral Camera Handpiece Options (SOPRO® cameras require docking station)

153831-001	Sopro 617 Camera	3,955
153831-006	Sopro 717 First Camera	4,707
153831-005	SoproLIFE® Camera	6,739
153831-012	SoproCARE® Camera	6,739

Elevance® Cuspidors

Standard Features

- Exclusive Glass Cuspidor Available in 3 Colors: Smoke, Blue & Crystal
- Programmable Cup Fill and Bowl Flush Sequence
- Lock Out Feature
- Left/Right Option Available
- For Use With Elevance Products Only

Part #	Description	Price
153804C-XXX*	Console Mounted Cuspidor, Specify Bowl Color	$1,960
153804LR-XXX*	LR Mounted Cuspidor, Specify Bowl Color (A)	3,080

***Specify Bowl Color:**

001	Smoke Color Bowl
003	Blue Color Bowl
004	Crystal Color Bowl

Replacement Bowls

053-1834-00	Smoke	300
053-1834-02	Blue	300
053-1834-03	Crystal	300

Note:

If mounted to Elevance® Chair with internal umbilical, but without an instrument delivery system, a J-box with regulators is required.

If mounted to Elevance® Chair only (153810-001), a J-box with regulators is required, a chair control is not an option and air, water and vacuum lines must be added at installation (not included).

A: LR Mounted Cuspidor

Blue Cuspidor

Crystal Cuspidor

Smoke Cuspidor

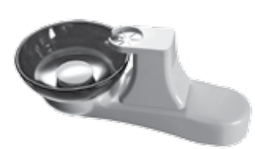

Elevance™ Assistant's Instruments

Standard Features

- Water By-pass and Composite Safe Light Setting Buttons
- Programmable Touch Pad Chair Control
- Syringe, HVE, and Saliva Ejector
- Air and Water Quick Connects
- Solids Collector
- For use with Elevance Products only

Part #	Description	Price
153802LR	Assistants Instrument Unit, Rear Chair Hub Mount - Elevance™	$2,015
153802CE	Assistants Instrument Unit, Console Mount - Elevance™	1,910

Factory Installed Options:

153787-001	Second HVE- Assembly	$132
153789-001	Auxiliary Instrument Holder, Left Hand	121
153789-002	Auxiliary Instrument Holder, Right Hand	121

Syringe Options

153854-003	Second Syringe (requires auxiliary instrument holder)	170
153854-004	Standard Heated Syringe (in lieu of standard one)	321
153779-003	Autoclavable Standard Syringe (in lieu of standard one)	290
153779-004	Autoclavable Heated Syringe (in lieu of standard one)	363

Curing Light Options

153784-002	SATELEC® Mini LED (Assistant's Mount) Curing Light	1,645

Dealer Installed Options:

153657-004	Assistant Tray System Rear Chair Hub Mount (12" x 14" tray)	410
153657-002	Assistant Tray System Console Mount (12" x 14" tray)	410

Note:

If mounted to Elevance® Chair with internal umbilical, but without an instrument delivery system, a J-box with regulators is required.

If mounted to Elevance® Chair only (153810-001), a J-box with regulators is required, a chair control is not an option and air, water and vacuum lines must be added at installation (not included).

Elevance® Monitor Mounts

Standard Features

- Gravity Centered Tilt for Easy Monitor Movement
- Accommodates Flat Panel Monitors that Comply with VESA Mounting Standards (monitor not Included)
- Junction Box Housing, if Required, must be Ordered Separately
- Curved Upper Arm and Straight Post are 39" tall (shown)

LR Chair Mounts

- Utilizes the LR Light Mount Position

Part #	Description	Price
153798-001	Mount for Elevance® Chair w/ LR Elevance™ Unit	$1,485
153798-101	Mount for Elevance® Chair without LR Unit	1,485

Elevance® Console Mounts

- Can be used in the Cuspidor, Light or Unit Position

Part #	Description	Price
153798-002	Mount for Elevance® Chair w/ Elevance™ Console Unit, factory installed	$1,380
153798-102	Mount for Elevance® Chair w/ Elevance™ Console Unit, field installed	1,380

Monitor

Part #	Description	Price
002-1125-00	17" HD Dental Grade Monitor with TV tuner	$1,827
015-2457-00	20' Monitor extension power cable	46

Notes

Ultra - Procenter Operatories

UltraComfort® - Procenter Console Operatory

UltraComfort® - Procenter LR Operatory

UltraComfort® - Procenter Console Operatory

Part #	Description	Price
153592-002	UltraComfort® Console Chair (Umbilical, Console Mount and Power Supply)	$11,095
ULTRA	Upcharge for Ultraleather™ Upholstery	697
153600-002	Procenter Console Mounted Instrument Delivery System	8,393
153603C	Cuspidor, Console Mounted	1,539
153604LR	Assistant's Instruments, Rear Chair Hub Mount	1,835
153818-004	Midmark, Console Mounted Operating Light	2,825
	Total	**$26,384**

UltraComfort® - Procenter LR Operatory

Part #	Description	Price
153592-003	UltraComfort® LR Chair (Umbilical, LR Unit Mount and Power Supply)	$11,095
ULTRA	Upcharge for Ultraleather™ Upholstery	697
153600-003	Concept LR Procenter Instrument Delivery System	7,427
153604LR	Assistant's Instruments, Rear Chair Hub Mount (not shown)	1,835
153914-002	Midmark, Concept LR Operating Light	2,825
	Total	**$23,879**

BACK TO CONTENTS

Ultra - Asepsis 21® Operatories

UltraTrim® - Asepsis 21® Console Operatory

UltraComfort® - Asepsis 21® LR Operatory

UltraTrim® - Asepsis 21® Console Operatory

Part #	Description	Price
153758-002	UltraTrim® Console Chair (Umbilical, Console Mount and Power Supply)	$11,095
ULTRA	Upcharge for Ultraleather™ Upholstery	697
DFSCC	Delete Foot Switch Chair Control	(342)
153600-011	Asepsis 21® Console Unit	6,559
153603C	Cuspidor, Console Mounted	1,539
153604LR	Assistant's Instruments, Rear Chair Hub Mount	1,835
153818-004	Midmark, Console Mounted Operating Light	2,825
	Total	**$24,208**

UltraComfort® - Asepsis 21® LR Operatory

Part #	Description	Price
153592-003	UltraComfort® LR Chair (Umbilical, LR Unit Mount and Power Supply)	$11,095
DFSCC	Delete Foot Switch Chair Control	(342)
153600-010	Asepsis 21® LR Unit	6,080
153604LR	Assistant's Instruments, Rear Chair Hub Mount	1,835
153914-002	Concept LR Operating Light	2,825
	Total	**$21,493**

For Asepsis 21 Unit options and accessories, refer to page 55

BACK TO CONTENTS

Ultra® Dental Chairs

Standard Features

- Hydraulic, Cantilever System
- Integrated Armrests for Easy Patient Entry/Exit
- Seamless, Silhouette Upholstery
- Double Articulating Headrest
- Programmable Foot Switch Control
- Two, Hip-Post Mounted, Programmable Controls
- Chair Swivels 60 Degrees (30 degrees each side of center)
- Concept LR and Console Mount Chairs Swivel 30 Degrees (15 degrees each side of center)
- Console and LR Chairs include Power Supply

Part #	Description	Price
153592-001	UltraComfort® Chair	$9,791
153592-002	UltraComfort® Chair w/ Internal Umbilical (4ft.) and Console Mount	11,095
153592-003	UltraComfort® Concept LR Chair w/ Internal Umbilical (4ft.) and LR Unit Mount	11,095
153758-001	UltraTrim® Chair	$9,791
153758-002	UltraTrim® Chair w/ Internal Umbilical (4ft.) and Console Mount	11,095
153758-003	UltraTrim® Concept LR Chair w/ Internal Umbilical (4ft.) and LR Unit Mount	11,095

Options:

ULTRA	Upcharge for Ultraleather™ Upholstery	697/chair
UPCHG	Upcharge for Non-Standard Upholstery Colors (Ultraleather™ and Silhouette)	324/chair
AIU3	3ft. Additional Length Umbilical (Total 7ft.)	207
AIU6	6ft. Additional Length Umbilical (Total 10ft.)	343
DFSCC	Delete Foot Switch Chair Control	(342)
002-0703-00	Remote Chair Control Kit (A)	399
MAGHR	Adjustable Headrest w/ Magnetic Contoured Pillow (B) (Note: Can be substituted for the double articulating at no charge)	567
002-1866-00	Unit Mount Arm Assembly (for a 2" OD round post) (C)	422

A: Remote Chair Control Kit

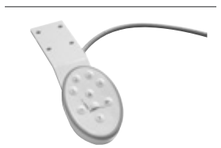

B: Adjustable Headrest w/ Magnetic Contoured Pillow

C: Unit Mount Arm Assembly

BACK TO CONTENTS

Upholstery Selections

UltraComfort® and UltraTrim® Dental Chairs

SILHOUETTE offers a sleek, smooth profile in a seamless, vacuum formed upholstery.

Color

201 Slate Grey
202 Iris Blue
208 Royal Carriage
255 Sage
256 Purple Grey
257 Taupe
259 Dusty Jade
260 Wedgewood
261 Cobalt
265 Desert Rose
312 Black

ULTRALEATHER™ offers beautiful, luxurious, soft surfaces with exceptional durability.

Color

458 Abalone
401 Admiral
262 Apricot
244 Arctic
748 Bamboo
722 Bayou
368 Cashmere
750 Charcoal
723 Cyan
371 Eucalyptus
751 Fudge
743 Grenadine
746 Hide
727 Hot Sauce
749 Lake
747 Lemon
602 Mandarin
398 Mica
326 Midnight
395 Milkweed
369 Nile
227 Papyrus
729 Parrot
618 Pewter
217 Plum
228 Raven Wing
400 Riviera
740 Silk
732 Silver Pearl
733 Sorbet

Replacement Upholstery

Part #	Description	Price
154070-xxx	UltraComfort® Chair	$1,222
154109-xxx	UltraTrim® Chair	1,222
154074-xxx	Double Articulating Headrest	567
154073-xxx	Magnetic Headrest	567

All Midmark Dental fabrics are selected for extreme durability, easy cleanability and richness of feel. Standard colors are subject to change without notice. Please refer to a current Midmark Upholstery Selection chart.

Replacement Upholstery

Part #	Description	Price
154054-xxx	UltraComfort® Chair - Plush	$1,919
154103-xxx	UltraComfort® Chair - Seamless	1,919
154110-xxx	UltraTrim® Chair - Plush	1,919
154111-xxx	UltraTrim® Chair - Seamless	1,919
154051-xxx	Double Articulating Headrest	567
154052-xxx	Magnetic Headrest	567

BACK TO CONTENTS

Patented pop-up lid with independent control system for each handpiece

Third generation patented Kink Valves

Kink Valve™ 10 Year Warranty

Standard Features

- Three Automatic Kink Valve Handpieces
- Straight 4-hole Handpiece Tubing
- Syringe with Autoclavable Tip
- Individual Water Volume Needle Valve Adjustment
- Individual Air Pressure Needle Valve Adjustment
- Handpiece Exhaust Oil Collector
- Handpiece Flush System
- Self Contained Water System
- City Water/Bottle Water Selector
- Counter Balanced Flex Arm with “One Way” Position Air Lock
- Dual Air Lock Release Integrated into the Handles
- Instrument Tray (9" x 13") and Autoclavable Instrument Pad
- Programmable Touch Pad Chair Control
- Contoured Junction Box

Procenter Instrument Delivery Systems

Chair Mounted Options:

Part #	Description	Price
For Use On Ultra Chairs		
153600-001	Procenter Console Mounted Delivery System External Umbilical (6') - Will Mount to Standard 2" Post Mount - Includes Square Junction Box - Optional Chair Control	$9,168
153600-002	Procenter Console Mounted Delivery System Internal Umbilical - Includes Contoured Junction Box - Includes Chair Control	8,393
153600-003	LR Procenter Delivery System	7,427
For Use On Elevance Chairs		
153600-020	LR Procenter Delivery System	7,427
153600-021	Procenter Console Mounted Delivery System	8,393

Factory Installed Options:

153607	Add or Delete Handpiece Position	+/- 400
DCC	Delete Unit Mounted Chair Control	(308)
029-4119-00	Chair Control Option (External Umbilical Model)	308
153808-001	Power Supply	$514
Syringe Options		
029-2611-00	Second Syringe (must be in last position on the right)	170
029-2612-00	Heated Dentist’s Syringe (Requires Power Supply)	321
029-3070-00	Autoclavable Syringe	290
Air Driven Options (for more information, go to Accessories on page 84)		
153630	Handpiece Illumination System	514
029-2633-00	Tubing and Lamp for Fiber Optic Handpiece	290
029-2605-00	Tubing for ISO-C Fiber Optic Handpiece	225
Scaler Options		
153765	SATELEC® SP Newtron Ultrasonic Scaler	2,129
153765-008	SATELEC® SP Newtron LED Ultrasonic Scaler	2,918
153764-001	Dentsply Cavitron Ultrasonic Scaler SPS G98A	2,833
Electric Motor Options		
153900-001	Bien Air MX2 LED, Single Motor System	4,416
153900-003	Bien Air MX2 LED, Two Motor System	7,288
Intraoral Camera Docking Station Options		
153831-011	SOPRO® Camera USB2 Docking Station.	2,472
Curing Light Options		
153766	SATELEC® Mini LED curing light	1,645

Procenter Instrument Delivery Systems (cont.)

Dealer Installed Options:

002-1868-00	Accessory Tray	410

Intraoral Camera Handpiece Options (SOPRO® cameras require docking station)

153831-001	Sopro 617 Camera	$3,955
153831-006	Sopro 717 First Camera.	4,707
153831-005	SoproLIFE® Camera	6,739
153831-012	SoproCARE® Camera.	6,739

BACK TO CONTENTS

Notes

BACK TO CONTENTS

Patented pop-up lid with independent control system for each handpiece

Third generation patented Kink Valves

Kink Valve™ 10 Year Warranty

Standard Features

- Three Automatic Kink Valve Handpieces
- Straight 4-hole Handpiece Tubing
- Syringe with Autoclavable Tip
- Individual Water Volume Needle Valve Adjustment
- Individual Air Pressure Needle Valve Adjustment
- Handpiece Exhaust Oil Collector
- Handpiece Flush System
- Self Contained Water System
- City Water/Bottle Water Selector
- Counter Balanced Flex Arm with “One Way” Position Air Lock
- Dual Air Lock Release Integrated into the Handles
- Instrument Tray (9" x 13") and Autoclavable Instrument Pad

Procenter Side Delivery System Options:

Cabinet Mounted Options

153678CM	Procenter Cabinet Mount System (16" Flex Arm, 13.5" Mount Arm)	$6,933

Wall Mounted Options (Includes small j-box housing)

153678WS	Procenter Wall Mount System (16" Flex Arm, 24" Mount Arm)	7,242
153678WL	Procenter Wall Mount System (24" Flex Arm, 24" Mount Arm)	7,613

Factory Installed Options:

153607	Add or Delete Handpiece Position	+/- 400
029-2895-01	Umbilical, 6' Extra Length	139
029-2901-00	Programmable Touch Pad Chair Control for Ultra Chair	308
029-2901-01	Programmable Touch Pad Chair Control for Elevance Chair	308

Syringe Options

029-2611-00	Second Syringe (must be in last position on the right)	170
029-2612-00	Heated Dentist’s Syringe (Requires Power Supply)	321

Air Driven Options (for more information, go to Accessories on page 84)

153630	Handpiece Illumination System	514
029-2633-00	Tubing and Lamp for Fiber Optic Handpiece	290
029-2605-00	Tubing for ISO-C Fiber Optic Handpiece	225

Scaler Options

153765	SATELEC® SP Newtron Ultrasonic Scaler	2,129
153765-008	SATELEC® SP Newtron LED Ultrasonic Scaler	2,918
153764-001	Dentsply Cavitron Ultrasonic Scaler SPS G98A	2,833

Electric Motor Options

153900-001	Bien Air MX2 LED, Single Motor System	4,416
153900-003	Bien Air MX2 LED, Two Motor System	7,288

Intraoral Camera Docking Station Options

153831-011	SOPRO® Camera USB2 Docking Station.	2,472

Curing Light Options

153766	SATELEC® Mini LED Curing Light	1,645

Dealer Installed Options:

002-1637-01	Large, Square J-Box Housing (In Lieu of Small, when Power Supply is Required)	328

Intraoral Camera Handpiece Options (SOPRO® cameras require docking station)

153831-001	Sopro 617 Camera	$3,955
153831-006	Sopro 717 First Camera.	4,707
153831-005	SoproLIFE® Camera	6,739
153831-012	SoproCARE® Camera.	6,739

Procenter Freestanding Treatment Console (FTC) Mounted

Rear Delivery with Quick Left/Right Conversion of Dentist and Assistant's Instruments (Designed for use with the Midmark Freestanding Treatment Console.)

Standard Features

- Assistant's Instruments:
  Single HVE, Saliva Ejector and Syringe
- Air and Water Quick Connects
- 21" W x 19" D Corian Work Surface

Units for use on the Artizan® 80, 85 and 90 series, all Integra™ cabinets:

Part #	Description	Price
153659-003	Pivoting Work Surface Only	$1,608
153659-004	Pivoting Work Surface and Assistant's Instruments	3,089
153659-002	Pivoting Work Surface, Assistant's Instruments and Procenter Delivery System	5,782

Units for use on the Artizan® 70 and 75 series cabinets:

Part #	Description	Price
153659-008	Assistant's Instruments and Procenter Delivery System for Slide-out Work Surface*	$5,086
153659-009	Assistant's Instruments for Slide-out Work Surface*	2,379

** Work Surface included with cabinets*

BACK TO CONTENTS

Procenter Instrument Rear Delivery System

Factory Installed Options:

153607	Add or Delete Handpiece Position	+/- 400
002-1256-00	Slide for pivoting work surface (Required if installed in cabinet other than FTC/Artizan® Cabinets)	41
LAMDED	Laminate Work Surface Deduction for pivoting work surface	(350)
QUPGRADE	Zodiaq® Work Surface Upgrade for pivoting work surface	211
153668-001	Chair Control, Dentist's Instruments, Ultra Chair	308
153668-003	Chair Control, Assistant's Instruments, Ultra Chair	308
153668-004	Chair Control, Dentist's Instruments, Elevance Chair	308
153668-005	Chair Control, Assistant's Instruments, Elevance Chair	308
152956-01	Second HVE for Assistant's Instruments	132
153606	300 Watt Power Supply, 115V	411

Syringe Options

029-2808-00	Second Syringe (Procenter Delivery Unit)	170
029-2809-00	Heated Dentist's Syringe (Requires Power Supply)	321

Air Driven Options (for more information, go to Accessories on page 84)

153630-004	Handpiece Illumination System	514
029-2853-01	Tubing and Lamp for Fiber Optic Handpiece	290
002-1830-00	Tubing for ISO-C Fiber Optic Handpiece	225

Scaler Options (will require 153606 power supply)

153765-002	SATELEC® SP Newtron Ultrasonic Scaler	2,129
153765-010	SATELEC® SP Newtron LED Ultrasonic Scaler	2,918
153764-002	Dentsply Cavitron Ultrasonic Scaler SPS G98A	2,833

Electric Motor Options (will require 153606 power supply)

153900-002	Bien Air MX2, Single Motor System	4,416
153900-004	Bien Air MX2, Two Motor System	7,288

Intraoral Camera Docking Station Options (will require 153606 power supply)

153831-007	SOPRO® Camera USB2 Docking Station.	2,472

Curing Light Options (will require 153606 power supply)

153766-002	SATELEC® Mini LED Curing Light (FTC Doctor's Unit Mount)	1,645
153766-006	SATELEC® Mini LED Curing Light (FTC Assistant's Unit Mount)	1,645

Dealer Installed Options:

002-1173-00	Swivel Tray Support and Clamp for Pivoting Work Surface	267
002-1184-00	Swivel Tub Support and Clamp for Pivoting Work Surface	267

Intraoral Camera Handpiece Options (SOPRO® cameras require docking station)

153831-001	Sopro 617 Camera	$3,955
153831-006	Sopro 717 First Camera.	4,707
153831-005	SoproLIFE® Camera	6,739
153831-012	SoproCARE® Camera.	6,739

BACK TO CONTENTS

Procenter Specialty Cabinet Mounted Delivery Unit - Doctor's 3 Handpiece Control with Syringe

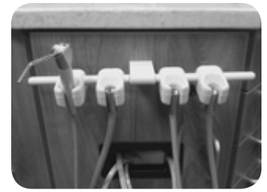

- Cabinet Mounted Control Tray
- Cabinet Mounted Water Bottle and Solids Trap
- Up to 3 Kink Valves
- Straight 4-Hole Handpiece Tubing

Part #	Description	Price
153839-004	Doctor 3 Handpiece Control with Syringe	$3,192
002-1359-00	Custom Cabinet Mount Kit (Note: Needed if ordering for any cabinet other than Artizan® Ortho cabinet.)	N/C

Options:

153843	Delete HP Position	(400)
153630-009	Handpiece Illumination System	535
029-5076-00	Tubing for ISO-C Fiber Optic HP	225
029-5076-01	Tubing and Lamp for Fiber Optic HP	290

Procenter Specialty Cabinet Mounted Delivery Unit - Doctor's 2 Handpiece Control with Syringe and Assistant's HVE and Saliva Ejector

- Cabinet Mounted Control Tray
- Cabinet Mounted Water Bottle and Solids Trap
- Up to 3 Kink Valves
- Straight 4-Hole Handpiece Tubing

Part #	Description	Price
153839-003	Doctor's 2 Handpiece Control with Syringe and Assistant's HVE and Saliva Ejector	$3,048
002-1359-00	Custom Cabinet Mount Kit (Note: Needed if ordering for any cabinet other than Artizan® Ortho cabinet.)	N/C

Options:

153843	Add or Delete HP Position	+/- 400
153630-009	Handpiece Illumination System	535
029-5076-00	Tubing for ISO-C Fiber Optic HP	225
029-5076-01	Tubing and Lamp for Fiber Optic HP	290
029-5102-00	2nd HVE for Assistant's Instruments	132

Cabinet Mounted Instrument Delivery Systems

Cabinet Mounted HVE and Saliva Ejector

Part #	Description	Price
152268-01	Cabinet Mounted HVE and Saliva Ejector	$764

Options:

152177-01	Second HVE System and Four Position Holder for Cabinet Mounted Assistant's Instruments	155

Cabinet Mounted Assistant's Instruments

Part #	Description	Price
002-1879-00	Cabinet Mounted Assistant's Instruments (Includes HVE, Saliva Ejector and Syringe)	$919

Options:

152360-01	Self Contained Water System	360
152177-01	Second HVE System and Four Position Holder for Cabinet Mounted Assistant's Instruments	155

Cabinet Mounted Assistant's Instruments with Valve Block

Part #	Description	Price
002-1831-00	Cabinet Mounted Assistant's Instruments with Valve Block (Includes HVE, Saliva Ejector and Syringe)	$1,443

Options:

152360-01	Self Contained Water System	360
152177-01	Second HVE System and Four Position Holder for Cabinet Mounted Assistant's Instruments	155

Procenter Cuspidors

Standard Features

- Made of Fine Vitreous China to Resist Staining
- Rotates 170 Degrees
- Adjustable Cup Fill Flow and Timer
- Adjustable Bowl Rinse Flow and Timer
- Safety Bail Switch

Part #	Description	Price
153603C	Cuspidor, Console Mounted	$1,539
153603LR	Cuspidor, Concept LR Mounted	2,862
153604LRCA	Concept LR Cuspidor and Assistant's Instruments Combination Unit (A)	3,870
153604LRCA-E	Concept LR Cuspidor and Assistant's Instruments Combination Unit (A) (for mounting on an Elevance chair with a procenter)	3,870

Note:

If mounted to a Midmark or Elevance Chair with Internal Umbilical, but without an Instrument Delivery System, a J-Box with regulators is required.

If mounted to an UltraComfort® or UltraTrim® or Elevance Chair only (153592-001, 153758-001, or 153810-001), a J-Box with regulators is required, a chair control is not an option and air, water and vacuum lines must be added at installation (not included).

A: Assistant's Instruments Combination Unit

BACK TO CONTENTS

Procenter Accessories

Procenter Console and Cuspidor

Includes Junction Box and 6' Umbilical

Console & Cuspidor with Square Junction Box

Part #	Description	Price
MPCSJ	Console and Cuspidor with Square Junction Box	$4,317
MPCSJ-E	Console and Cuspidor with Square Junction Box for Elevance® Chair	4,317

Console & Cuspidor with Contoured Junction Box

Part #	Description	Price
MPCCJ	Console and Cuspidor with Contoured Junction Box	$4,558
MPCCJ-E	Console and Cuspidor with Contoured Junction Box for Elevance® Chair	4,558

Unit Mount Arm for the Midmark Chair

- For a 2" Round Post

Part #	Description	Price
002-1866-00	Unit Mount Arm for the UltraComfort®/UltraTrim® Chair	$422

BACK TO CONTENTS

Standard Features

- Programmable Touch Pad Chair Control
- Syringe, HVE and Saliva Ejector
- Water Quick Connect (CE and LR Models Only)
- Solids Collector

153604CE

153604LR

153604LRCA

Assistant's Instruments Options For Ultra Chairs

Part #	Description	Price
153604CE	Assistant's Instrument Unit, Console Mount	$1,675
153604LR	Assistant's Instrument Unit, Rear Chair Hub Mount	1,835
153604LRCA	Concept LR Cuspidor and Assistant's Instrument Combination Unit	3,870

Assistant's Instruments Options For Elevance Chairs*

153604CE	Assistant's Instrument Unit, Console Mount	$1,675
153604LR-E	Assistant's Instrument Unit, Rear Chair Hub Mount	1,835
153604LRCA-E	Concept LR Cuspidor and Assistant's Instrument Combination Unit	3,870

*(*If being ordered without a Procenter Instrument Delivery System, an extra touchpad kit is requied)*

Factory Installed Options:

029-2563-00	Second HVE Assembly	132
029-2804-00	Air Operated Vacuum System (not available on LRCA model)	393
029-2770-00	Air Quick Connect (not available on LRCA model)	131
153808-001	Power Supply	514
DCC	Delete Chair Control	(308)

Factory Installed Options (Cont'd)

Syringe Options (not available on LRCA model)

029-2561-00	Second Syringe (Requires Auxiliary Instrument Holder)	$170
029-2564-00	Auxiliary Instrument Holder (A)	121

Curing Light Options

153766-004	SATELEC® Mini LED (Assistant's Unit Mount) (Not available on 153604LRCA, LR Cuspidor and Asst. Instr. Comb. Unit)	1,645

Dealer Installed Options (not available on LRCA models)

153657-002	Assistant Tray System (12" x 14" Tray) (B) for Ultra Chair model	410
153657-004	Assistant Tray System (12" x 14" Tray) (B) for -E model	410

A: Auxiliary Instrument Holder

B: Assistant Tray System (12" x 14" Tray)

Note:

If mounted to an UltraComfort® or UltraTrim®, or Elevance Chair with Internal Umbilical, but without an Instrument Delivery System, a J-Box with regulators is required.

If mounted to an UltraComfort®, UltraTrim®, or Elevance Chair only (153592-001, 153758-001, or 153810-001), a J-Box with regulators is required, a chair control is not an option and air, water and vacuum lines must be added at installation (not included).

Procenter & Elevance Monitor Mounts

Standard Features

- Gravity Centered Tilt for Easy Monitor Movement
- Accommodates Flat Panel Monitors that Comply with VESA Mounting Standards (monitor not included)
- Junction Box Housing, if Required, must be Ordered Separately
- Tall Curved Upper Arm and Straight Post are 33" tall (shown)
- Short Curved Upper Arm is 17" Tall

LR Chair Mounts – For Elevance Chair

- Utilizes the LR Light Mount Position

Part #	Description	Price
153823-001	Tall Curved Arm Mount for Elevance® Chair w/ LR Unit	$1,409
153823-002	Tall Curved Arm Mount for Elevance® Chair without LR Unit	1,820
153824-001	Short Curved Arm Mount for Elevance® Chair w/ LR Unit	1,331
153824-002	Short Curved Arm Mount for Elevance® Chair without LR Unit	1,742

LR Chair Mounts – For Ultra Chair

- Utilizes the LR Light Mount Position

Part #	Description	Price
153698	Tall Curved Arm Mount for Knight and Midmark Chairs w/ LR Units	$1,409
153698-001	Tall Curved Arm Mount for Midmark Chairs without LR Units	1,820
153698-002	Tall Curved Arm Mount for Knight Chairs without LR Units	1,820
153763	Short Curved Arm Mount for Knight and Midmark Chairs w/ LR Units	1,331
153763-001	Short Curved Arm Mount for Midmark Chairs without LR Units	1,742
153763-002	Short Curved Arm Mount for Knight Chairs without LR Units	1,742
153705	2 O.D. Straight Post Mount for Knight and Midmark Chairs w/ LR Units	1,004
153705-001	2 O.D. Straight Post Mount for Midmark Chairs without LR Units	1,421
153705-002	2 O.D. Straight Post Mount for Knight Chairs without LR Units	1,421

Procenter Monitor Mounts

Procenter Console Mounts

- Can be used in the Cuspidor, Light or Unit Position

Part #	Description	Price
153699	Tall Curved Arm for Procenter Console	$902
153762	Short Curved Arm for Procenter Console	829

Clamp Post Mount

- Mount that Clamps to the Light Post

Part #	Description	Price
002-1836-00	Clamp Post, Monitor Mount (requires light with cable cut-out)	$1,067
153701	Keyboard & Mouse Support Tray	575

Monitor

Part #	Description	Price
002-1125-00	17" HD Dental Grade Monitor with TV tuner	$1,827
015-2457-00	20' Monitor extension power cable	46

Biltmore Asepsis 21® Console Operatory

(Package BCCA21CLL)

(Package CLRC-LRL)

Biltmore Asepsis 21® Console Operatory

Part #	Description	Price
152647-01	Biltmore Classic Chair	$7,105
PLUSH	Plush Upholstery Upgrade	567
KS23-004	Console Mount Asepsis 21® with Assistant's Instruments and Cuspidor	8,515
153173-01	Unit Mounted Chair Control	350
153937-001	Console Mount Light	3,000
	Total	19,537
	5% Discount	(977)
	Operatory Price	18,560

* NOTE: Complete package price only.
Must be ordered as a complete package in order to qualify for special pricing.

Biltmore Asepsis 21® LR Operatory

153102-01	LR Classic Chair	$7,329
KLRC U	LR Asepsis 21® with Chair Control	5,883
153139-01	Vac Pack Assistant's Instruments	1,210
153215-01	Assistant's Instrument Arm and Holder	814
153218-01	9" x 13" Tray	325
153937-003	LR Light	3,216
	Total	18,777
	5% Discount	(939)
	Operatory Price	17,838

* NOTE: Complete package price only.
Must be ordered as a complete package in order to qualify for special pricing.

Build your own Biltmore Operatory

Choose any Biltmore chair, Instrument Delivery Unit, Assistant's Instrument Package and Operating Light and receive **5% discount** off the retail price.

BACK TO CONTENTS

Biltmore Classic Dental Chair

Standard Features

- Electro-Mechanical Actuation Cantilever System
- Automatic Return
- Swing Out Arm Rests
- Chair Swivels 90 Degrees (45 Degrees Each Side of Center)
- Full Function Foot Control
- Seamless, Silhouette Upholstery
- Adjustable Headrest with Magnetic Contoured Pillow

Part #	Description	Price
152647-01	Biltmore Classic Chair (Includes Membrane Backswitches on Both Sides of Chair Back (A) and Adjustable Automatic Preset Positioning.)	$7,105

Options:

PLUSH	Upcharge for Plush Upholstery	567
UPCHG	Upcharge for Non-Standard Upholstery Colors	332
154087	Double Articulating Headrest (Notes: Will not Support Vac Pak Assistant's Instrumentation Holder. Can be Substituted for Magnetic Headrest for an Additional $280)	536
152509-01	Unit Mount (for 2" Diameter Round Post)	233
152284-01	Chair Mount Adapter/2" Post 18" Long	375
152538-01	48" Long x 2" Diameter Light Post w/ Mount	414
154081	Adjustable IV Arm Board (16" x 3.5" Pad) (B)	775
153686	IV Pole w/ Butterfly Clamp (Attaches to 2" ID Post)	799

A: Membrane Backswitches

B: Adjustable IV Arm Board

Unit mounted chair control (see unit options.)

BACK TO CONTENTS

Biltmore LR Classic Dental Chair

Standard Features

- Electro-Mechanical Actuation Cantilever System
- Automatic Return
- Swing Out Arm Rests
- Full Function Foot Control
- Seamless, Silhouette Upholstery
- Adjustable Headrest with Magnetic Contoured Pillow
- Internal Plumbing for use with Asepsis 21® LR Unit or International Unit

Part #	Description	Price
153102-01	LR Classic Chair (Without Rotation)	$7,329

Options:

PLUSH	Upcharge for Plush Upholstery	567
UPCHG	Upcharge for Non-standard Upholstery Colors	332
154087	Double Articulating Headrest (Notes: Will not Support Vac Pak Assistant's Instrumentation Holder. Can be Substituted for Magnetic Headrest for an Additional $280)	536
154081	Adjustable IV Arm Board (16" x 3.5" Pad) (A)	775
153686	IV Pole w/ Butterfly Clamp (Attaches to 2" ID Post)	799

A: Adjustable IV Arm Board

Unit mounted chair control (see unit options.)

BACK TO CONTENTS

Upholstery Selections

Biltmore Classic Dental Chairs

VACUFORM upholstery offers a sleek, smooth profile in 11 standard colors.

Color

96	Iris Blue
103	Slate Grey
112	Sage
113	Purple Grey
114	Taupe
124	Royal Carriage
128	Dusty Jade
129	Wedgewood
130	Cobalt
146	Desert Rose
312	Black

KNIGHT PLUSH provides the ultimate in plush luxury, with a choice of six standard colors.

Color

135	Cobalt
136	Dusty Jade
137	Desert Rose
140	Purple Grey
143	Wedgewood
144	Taupe

Replacement Upholstery

Part #	Description	Price
154075-xxx	Vacuform Upholstery	$1,014
154087-xxx	Double Articulating Headrest	536
154077-xxx	Magnetic Headrest	430

Part #	Description	Price
154076-xxx	Plush Upholstery	$1,580
154087-xxx	Double Articulating Headrest	536
154077-xxx	Magnetic Headrest	430

All Midmark Dental fabrics are selected for extreme durability, easy cleanability and richness of feel.
Standard colors are subject to change without notice. Please refer to a current Midmark Upholstery Selection chart.

BACK TO CONTENTS

Asepsis 21® Instrument Delivery System

Great Value in a Compact Delivery Unit

Third generation patented Kink Valves

Kink Valve™ 10 Year Warranty

Standard Features

- Three Automatic Kink Valve Handpiece Positions
- Straight 4-hole Handpiece Tubing
- Syringe with Autoclavable Tip
- Individual Water Volume Adjustment
- Individual Air Pressure Adjustment
- Wet/Dry Foot Control
- Handpiece Exhaust Oil Collector
- Handpiece Flush System
- Self Contained Water System
- Counter Balanced Flex Arm with "One Way" Positive Air Lock

Asepsis 21® Instrument Delivery System For Ultra Chairs

Kink Valve™ 10 Year Warranty

Standard Features

- Three Automatic Kink Valve Handpiece Positions
- Straight 4-hole Handpiece Tubing
- Syringe with Autoclavable Tip
- Individual Water Voume Adjustment
- Individual Air Pressure Adjustment
- Handpiece Exhaust Oil Collector
- Handpiece Flush System
- City Water/Bottle Water Selector
- Counter Balanced Flex Arm with "One Way" Positive Air Lock
- Instrument Tray with Non-Skid Pad
- Contoured Junction Box
- Programmable Touchpad Chair Control
- Air and Water Quick Connects (Console Mounted Only)

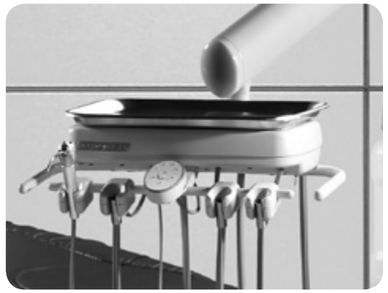

Part #	Description	Price
153600-010	Asepsis 21® LR Unit	$6,080
153600-011	Asepsis 21® Console Unit	6,559

Options:

153837	Add or Delete Handpiece Position	+/- 310
153630	Handpiece Illumination System	514
152024-01	Tubing and Lamp for Fiber Optic Handpiece	290
152026-01	Tubing for ISO-C Fiber Optic Handpiece	225
151865-01	Heated Dentist's Syringe (Requires Power Supply)	461
153808-001	Power Supply	514
153838	Delete Unit Mounted Chair Control	(308)

Console Mounted

Asepsis 21® Unit, Assistant's Instruments, Cuspidor

Standard Features

- Instrument Tray with Non-Skid Pad
- Water Quick Disconnect with Volume Control
- Assistant's Console
- Right or Left Hand Mounting for Biltmore Chair
- Junction Box
- 6' Umbilical

Part #	Description	Price
KS23-001	Asepsis 21® Console Unit	$6,355
KS23-002	Asepsis 21® Console Unit with Assistant's Instruments (Syringe, 1 HVE, 1 Saliva Ejector)	7,005
KS23-003	Asepsis 21® Console Unit with Cuspidor	7,862
KS23-004	Asepsis 21® Console Unit with Assistant's Instruments and Cuspidor	8,515

Options:

A21AHP	Add or Delete Handpiece Position	+/- 310
153695	Handpiece Illumination System	514
152024-01	Tubing and Lamp for Fiber Optic Handpiece	290
152026-01	Tubing for ISO-C Fiber Optic Handpiece	225
152177-01	Second HVE System and 4 Position Holder	155
153314	Remote Cuspidor Bowl Flush Button	91
153002-01	Cuspidor Vacuum Drain	409
152176	Air Quick Connect	93
LCM	Less Chair Mount Bracket	(227)
SCMA	Chair Mount Adapters in Lieu of Standard Mount	199
153173-01	Unit Mounted Knight Chair Control (Center)	350
153003-01	City/Bottle Water Selector	181
152998-01	Air Operated Saliva Ejector	375
152999-01	Air Operated HVE	632
152945-01	Console Mounted Telescopic Arm - 1 HVE Position (A)	825
152946-01	Console Mounted Telescopic Arm - 2 HVE Positions	886
153242-01	Vac Pak System (Assistant's Instruments: Syringe, 1 HVE Position, Saliva Ejector, Solids Collector, Water Quick Connect, Flow Control, Air Quick Connect, Headrest Instrument Holder, 8' Umbilical*) (B)	1,295
153243-01	Vac Pak System (Assistant's Instruments: Syringe, 2 HVE Positions, 4 Position Holder, Saliva Ejector, Solids Collector, Water Quick Connect, Flow Control, Air Quick Connect, Headrest Instrument Holder, 8' Umbilical*)	1,366

** Junction Box Required if Ordered Without Asepsis 21® Console Unit*

A: Mounted Telescopic Arm

B: Vac Pak System

Asepsis 21® Instrument Delivery System For Biltmore Chairs

Asepsis 21® Unit, Assistant's Instruments, Cuspidor

Standard Features

- Instrument Tray with Non-Skid Pad
- Left and Right Hand Positioning
- Junction Box
- 1 ft. Umbilical

Part #	Description	Price
KLRC U	Asepsis 21® LR Unit - Includes Three Kink Valve Handpiece Positions and Syringe - Includes Unit Mounted Chair Control - Mounts to LRC Chair Only	$5,883

Options:

A21AHP	Add or Delete Handpiece Position	+/- 310
153695	Handpiece Illumination System	514
152024-01	Tubing and Lamp for Fiber Optic Handpiece	290
152026-01	Tubing for ISO-C Fiber Optic Handpiece	225
152915	City/Bottle Water Selector	181
153154-01	LR External Mount and Plumbing Kit (to mount LR Units to Biltmore Classic Chairs)	505
153201-01	LR Cuspidor (Requires J-Box if Ordered without Asepsis 21® LR Unit) (A)	2,444
153208-01	LR Telescopic Arm - 1 HVE Position (For Use with LR Cuspidor Only) (B)	825
153209-01	LR Telescopic Arm - 2 HVE Positions (For Use with LR Cuspidor Only)	886
153215-01	Assistant's Instrument Arm and Holder 1-HVE Position (Instruments not Included) (C)	814
153217-01	Assistant's Instrument Arm and Holder 2-HVE Positions (Instruments not Included)	867
153218-01	9" x 13" Tray Option to be Use with Assistant's Instrument Arm and Holder	325
153139-01	Vac Pak System (Assistant's Instruments: Syringe, 1 HVE Position, Saliva Ejector, Solids Collector, Water Quick Connect, Flow Control, Air Quick Connect, Headrest Instrument Holder (D)	1,210
153140-01	Vac Pak System (Assistant's Instruments: Syringe, 2 HVE Positions, 4 Position Holder, Saliva Ejector, Solids Collector, Water Quick Connect, Flow Control, Air Quick Connect, Headrest Instrument Holder)	1,240

A: LR Cuspidor

B: LR Telescopic Arm

C: Assistant's Instrument Arm and Holder

D: Vac Pak System

Up to Five (5) Handpiece Positions Available

Third generation patented Kink Valves

Kink Valve™ 10 Year Warranty

Standard Features

- Automatic Kink Valve Handpiece Positions
- Straight 4-hole Handpiece Tubing
- External Tube Supports
- Syringe with Autoclavable Tip
- Individual Water Volume Needle Valve Adjustment
- Individual Air Pressure Adjustment
- Handpiece Exhaust Oil Collector
- Handpiece Flush System
- Self Contained Water System
- City Water/Bottle Water Selector
- Counter Balanced Flex Arm With “One Way” Positive Air Lock
- Air Lock Release
- Right and Left Hand Adaptability
- Movable (9-5/8" x 13-3/8") Instrument Tray
- Programmable Touch Pad Chair Control (Internal Umbilical Model, Right Hand Mount STD)

Console Mounted for Ultra Chairs

External Umbilical Models will Mount to a Standard 2" Post Mount.

External Umbilical Length is 6 feet

Standard Features

- Water Quick Connect
- Air Quick Connect
- Right and Left Hand Adaptability
- Programmable Touch Pad Chair Control (Internal Umbilical Model) (If not specified, Right Hand Chair Control Mount supplied.)
- Junction Box:
  Contoured (Internal Umbilical)
  Square (External Umbilical)

Part #	Description	Price
153600-304	International Console Mounted Delivery System, External Umbilical, 3 Hdpc	$8,775
153600-504	International Console Mounted Delivery System, External Umbilical, 5 Hdpc	9,865
153600-305	International Console Mounted Delivery System, Internal Umbilical, 3 Hdpc	8,270
153600-505	International Console Mounted Delivery System, Internal Umbilical, 5 Hdpc	9,360

Options:

153630	Handpiece Illumination System	514
152021-01	Tubing and Lamp for Fiber Optic Handpiece	290
152022-01	Tubing for ISO-C Fiber Optic Handpiece	225
029-2684-00	Chair Control, External Umbilical Model, Right	398
029-2685-00	Chair Control, External Umbilical Model, Left	398
151916-01	Large Tray and Arm System (10 5/8" x 15 1/8" Tray)	410

International Instrument Delivery System

Concept LR Mounted for Ultra Chairs

Standard Features

- Right and Left Hand Positioning
- Contoured Junction Box

Part #	Description	Price
153600-306	International Concept LR Procenter Delivery System, Internal Umbilical, 3 Hdpc	$6,695
153600-506	International Concept LR Procenter Delivery System, Internal Umbilical, 5 Hdpc	7,785

Options:

153630	Handpiece Illumination System	514
152021-01	Tubing and Lamp for Fiber Optic Handpiece	290
152022-01	Tubing for ISO-C Fiber Optic Handpiece	225
151916-01	Large Tray and Arm System (10 5/8" x 15 1/8" Tray)	410

BACK TO CONTENTS

Asepsis 21® Instrument Delivery System

Console Mounted For Biltmore Chairs

International Delivery, Assistant's Instruments, Cuspidor

Standard Features

- Movable 9-5/8" x 13-5/8" Instrument Tray and Holder
- Autoclavable Instrument Pad
- Water Quick Disconnect with Volume Control
- Assistant's Console
- Right or Left Hand Mounting for Biltmore Chair
- Junction Box
- 6' Umbilical

Part #	Description	Price
KI4-401	Four Instrument Positions-without Assistant's Instruments* or Cuspidor	$7,158
KI4-402	Four Instrument Positions-with Assistant's Instruments*	7,809
KI4-403	Four Instrument Positions-with Cuspidor	8,669
KI4-404	Four Instrument Positions-with Assistant's Instruments* and Cuspidor	9,319
KI6-601	Six Instrument Positions-without Assistant's Instruments* or Cuspidor	8,155
KI6-602	Six Instrument Positions-with Assistant's Instruments*	8,807
KI6-603	Six Instrument Positions-with Cuspidor	9,667
KI6-604	Six Instrument Positions-with Assistant's Instruments* and Cuspidor	10,317

** Assistant's Instruments include Syringe, 1 HVE, 1 Saliva Ejector*

Options:

153695	Handpiece Illumination System	514
152021-01	Tubing and Lamp for Fiber Optic Handpiece	290
152022-01	Tubing for ISO-C Fiber Optic Handpiece	225
152177-01	Second HVE System and 4 Position Holder	155
153314	Remote Cuspidor Bowl Flush Button	91
153002-01	Cuspidor Vacuum Drain	409
152176	Air Quick Connect	93
LCM	Less Chair Mount Bracket	(227)
SCMA	Chair Mount Adapters in Lieu of Standard Mount	199
152856-01	Unit Mounted Knight Chair Control (Right Hand)	350
152857-01	Unit Mounted Knight Chair Control (Left Hand)	350
153003-01	City/Bottle Water Selector	181
152998-01	Air Operated Saliva Ejector	375
152999-01	Air Operated HVE	632
152945-01	Console Mounted Telescopic Arm - 1 HVE Position	825
152946-01	Console Mounted Telescopic Arm - 2 HVE Positions	886
153242-01	Vac Pak System (Assistant's Instruments: Syringe, 1 HVE Position, Saliva Ejector, Solids Collector, Water Quick Connect, Flow Control, Air Quick Connect, Headrest Instrument Holder, 8' Umbilical)*	1,295
153243-01	Vac Pak System (Assistant's Instruments: Syringe, 2 HVE Positions, 4 Position Holder, Saliva Ejector, Solids Collector, Water Quick Connect, Flow Control, Air Quick Connect, Headrest Instrument Holder, 8' Umbilical)*	1,366

** Junction Box Required if Ordered Without Unit*

BACK TO CONTENTS

LR Mounted For Biltmore Chairs

International Delivery, Assistant's Instruments, Cuspidor

Standard Features

- Arm System and Tray (9" x 13")
- Left and Right Hand Positioning
- Junction Box
- 1 ft. Umbilical

Part #	Description	Price
KLRCI-4	Knight International Unit - Includes Three Kink Valve Handpiece Positions and Syringe - Includes Unit Mounted Chair Control - Mounts to LRC Chairs Only	$6,285
KLRCI-6	Knight International Unit - Includes Five Kink Valve Handpiece Positions and Syringe - Includes Unit Mounted Chair Control - Mounts to LRC Chairs Only	7,285

Options:

153695	Handpiece Illumination System	514
152021-01	Tubing and Lamp for Fiber Optic Handpiece	290
152022-01	Tubing for ISO-C Fiber Optic Handpiece	225
153154-01	LR External Mount and Plumbing Kit (To Mount LR Units to Biltmore Classic Chairs)	505
152915	City/Bottle Water Selector	181
153201-01	LR Cuspidor (Requires J-Box if Ordered without Unit)	2,444
153208-01	LR Telescopic Arm - 1 HVE Position (For Use with LR Cuspidor Only)	825
153209-01	LR Telescopic Arm - 2 HVE Positions (For Use with LR Cuspidor Only)	886
153215-01	Assistant's Instrument Arm and Holder 1-HVE Position (Instruments not Included)	814
153217-01	Assistant's Instrument Arm and Holder 2-HVE Positions (Instruments not Included)	867
153218-01	9" x 13" Tray Option to be Use with Assistant's Instrument Arm and Holder	325
153139-01	Vac Pak System (Assistant's Instruments: Syringe, 1 HVE Position, Saliva Ejector, Solids Collector, Water Quick Connect, Flow Control, Air Quick Connect, Headrest Instrument Holder)	1,210
153140-01	Vac Pak System (Assistant's Instruments: Syringe, 2 HVE Positions, 4 Position Holder, Saliva Ejector, Solids Collector, Water Quick Connect, Flow Control, Air Quick Connect, Headrest Instrument Holder)	1,240

Accessory Trays

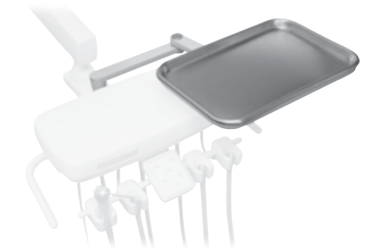

Arm Instrument Tray System

- 9" x 13"

Part #	Description	Price
152089-01	Arm Instrument Tray System (Asepsis 21®)	$325

Arm System for Large Instruments

- 11.6" x 15"

Part #	Description	Price
151916-01	Arm System for Large Instruments (International)	$410

Accessory Shelf

- 12" x 12"
- Mounts to Light Post

Part #	Description	Price
152526-01	Accessory Shelf	$245

Asepsis 21® Left/Right Duo Cart

Standard Features

- Assistant's Instrumentation: HVE, Saliva Ejector and Syringe
- Master Shutoff
- Water Quick Connect
- Solids Separator
- Adjustable Height "H" Frame (Epoxy Powder Coat Finish)
- 2" Diameter Dual Wheel Casters
- 21" x 24" Stain Resistant Work Surface
- 7' Umbilical
- Small Junction Box
- Specify 9" x 13" Tray or Tub Support (STD)

Part #	Description	Price
153740-003	Asepsis 21® L/R Duo Cart	$5,318

Options:

A21AHP	Add or Delete Handpiece Position	+/- 310
153693	Handpiece Illumination System	514
152171-01	Tubing and Lamp for Fiber Optic Handpiece	290
152178-01	Tubing for ISO-C Fiber Optic Handpiece	225
152175-01	Self Contained Water System	360
152177-01	Second HVE System and Four position Holder	155
152176	Air Quick Connect	93
153198-01	Keyboard Support Tray	417
153169-01	Foot Control Platform	183
153344-01	Remote Biltmore Chair Control	345

BACK TO CONTENTS

Assistant's Cart

Standard Features

- Assistant's Instrumentation: HVE, Saliva Ejector and Syringe
- Master Shutoff
- Water Quick Connect
- Solids Separator
- Adjustable Height "H" Frame (Epoxy Powder Coat Finish)
- 2" Diameter Dual Wheel Casters
- 21" x 24" Stain Resistant Work Surface
- 7' Umbilical
- Small Junction Box
- Specify 9" x 13" Tray or Tub Support (STD)

Part #	Description	Price
153740-001	Assistant's Cart	$2,985

Options:

152175-01	Self Contained Water System	360
152177-01	Second HVE System and Four position Holder	155
152176	Air Quick Connect	93
153198-01	Keyboard Support Tray	417

Mobile Work Surface

Standard Features

- Adjustable Height "H" Frame (Epoxy Powder Coat Finish)
- 2" Diameter Dual Wheel Casters
- 21" x 24" Stain Resistant Work Surface

Part #	Description	Price
152464-01	Mobile Work Surface	$1,242

BACK TO CONTENTS

Asepsis 21® Doctor's Cart

Standard Features

- Master Shutoff
- Adjustable Height "H" Frame (Epoxy Powder Coat Finish)
- 2" Diameter Dual Wheel Casters
- 9-5/8" x 13-5/8" Stainless Steel Instrument Tray
- 7' Umbilical
- Small Junction Box

Part #	Description	Price
153740-002	Asepsis 21® Doctor's Cart	$3,917

Options:

A21AHP	Add or Delete Handpiece Position	+/- 310
153693	Handpiece Illumination System	514
152171-01	Tubing and Lamp for Fiber Optic Handpiece	290
152178-01	Tubing for ISO-C Fiber Optic Handpiece	225
152360-02	Self Contained Water System	360
152361-01	Accessory Shelf (11.5" x 11.5")	345
153169-01	Foot Control Platform	183
153344-01	Remote Biltmore Chair Control	345
152396-01	13" x 18" Work Surface	357
151871-01	Second Syringe	170

Asepsis 21® Cart Delivery Systems

Asepsis 21® Hygienist's Cart

Standard Features

- Two Automatic "Kink Valve" Handpiece Positions
- Assistant's Instrumentation: HVE, Saliva Ejector and Syringe
- Master Shutoff
- Solids Separator
- Adjustable Height "H" Frame (Epoxy Powder Coat Finish)
- 2" Diameter Dual Wheel Casters
- 9-5/8" x 13-5/8" Stainless Steel Instrument Tray
- 7' Umbilical
- Small Junction Box
- 13" x 18" Optional Work Surface

Part #	Description	Price
153740–004	Asepsis 21®, Hygienist's Cart (Specify Left Hand or Right Hand Vacuum Instruments, RH Shown Above)	$4,194

Options:

A21AHP	Add Or Delete Handpiece Position	+/- 310
153693	Handpiece Illumination System	514
152171-01	Tubing and Lamp for Fiber Optic Handpiece	290
152178-01	Tubing for ISO-C Fiber Optic Handpiece	225
152360-02	Self Contained Water System	360
152883-01	Second HVE System and Four position Holder	167
152361-01	Accessory Shelf (11.5" x 11.5")	345
153169-01	Foot Control Platform	183
153344-01	Remote Biltmore Chair Control	345
152396-01	13" x 18" Work Surface (Shown Above)	357
151871-01	Second Syringe	170

Cuspidor

Standard Features

- Made of Fine Vitreous China to Resist Staining
- Adjustable Cup Fill Flow and Timer
- Adjustable Bowl Rinse Flow and Timer

Cuspidor with Accessory Console

- Unit Post with Cap
- 2" I.D. x 6' Long Umbilical
- Water Quick Disconnect and Volume Control

Part #	Description	Price
153044-01	Cuspidor with Accessory Console	$3,020

Options:

152509-01	Unit Mount for Biltmore Classic Chairs	233
SCMA	Special Chair Mount Adaptor (for other than Knight chairs)	199
153040-01	Unit-Mounted Light Post (for Universal Light to Knight Console)	255
002–1301–00	Vacuum Instrumentation (Console Mounted) with Holder	651
152177-01	Second HVE System and Four Position Holder	155
SHS-01	Syringe Heating System	448
153002-01	Cuspidor Vacuum Drain	409
152360-01	Self Contained Water System	360
152176	Air Quick Connect	93
152527-01	Telescoping Arm (Three Position Holder)	825
152528-01	Telescoping Arm (Four Position Holder)	886
ELU-PF	Extra length Umbilical (per foot)	32
153677	Large J-Box with Regulators	890
029-2667-00	Small J-Box with Regulators	890
153073	Cuspidor Main On/Off Switch	45

Cuspidor Field Retro-Fit Kit

- For Existing Knight Units with Console without Cuspidor

Part #	Description	Price
152952-01	Cuspidor Field Retro-Fit Kit	$1,699

Cuspidor

LR Chair Mounted Cuspidor

- When used with equipment other than Concept LR. This cuspidor may require a J-Box. See options below.

Part #	Description	Price
153201-01	LR Chair Mounted Cuspidor	$2,444

Cuspidor for 2" Post

- Twin Pivot Support Arm
- 1-1/2" I.D. x 8' Long Umbilical

Part #	Description	Price
153050-01	Cuspidor for 2" Post	$1,993

Options:

152284-01	Chair Mount Adaptor 2" Post 18" Long for Biltmore Classic Chair	375
SCMA	Special Chair Mount Adaptor (for other than Knight chairs)	199
152716-01	2" Diameter x 18" Long Round Post for Cuspidor	169
152596-01	Vacuum Instrumentation for Post Mounting with Holder	495
152177-01	Second HVE System and Four Position Holder	155
SHS-01	Syringe Heating System	448
153002-01	Cuspidor Vacuum Drain	409
152360-01	Self Contained Water System	360
152176	Air Quick Connect	93
152527-01	Telescoping Arm (Three Position Holder)	825
152528-01	Telescoping Arm (Four Position Holder)	886
ELU-PF	Extra length Umbilical (per foot)	32
153677	Large J-Box with Regulators	890
029-2667-00	Small J-Box with Regulators	890
153073	Cuspidor Main On/Off Switch	45

Midmark Operating Light - Halogen

Standard Features

- Advanced Shadow Reduction
- Upfront Touchpad Controls
- 3 Axis of Rotation
- Automatic On/Off Setting
- Three Intensity Settings
- Independent Composite Safe Setting
- Integrated Voltage Regulator

Specifications:

Operate Mode Color Temperature	4500, 4750, 5000 Kelvin
Operate Mode Intensity	1400, 1950, 2500 Foot Candles 15000, 21000, 27000 Lux
Composite Mode Color Temperature	4000 Kelvin
Composite Mode Intensity	550 Foot Candles 5900 Lux
Color Rendering Index	Greater than 90%
Pattern Size	3.3" x 7.5"

A: Midmark Console Mount Operating Light with Cut-out for Monitor Mount

B: Monitor Mount, Clamp Post

Midmark Operating Light - Halogen

For use with Elevance Units

Part #	Description	Price
153818-002	Midmark LR Operating Light - Elevance®	$2,825
153818-001	Midmark Console Mount Operating Light - Elevance®	2,825
153818-006	Midmark Console Mount Operating Light - Elevance® with Cut-out for Monitor Mount (A) (split light arm allows upper light arm rotation independent of monitor mount)	2,825
002-1836-00	Monitor Mount Clamp Post (B)	1,067
153808-001	Elevance® Power Supply	514
153799-001	LR Light Adapter Kit - For mounting a 153818-002 Light to an Elevance® Chair only without LR Unit* (includes LR arm mount, wiring harness and contoured transformer cover box)	1,050

For use with Procenter units on Elevance Chairs

Part #	Description	Price
153818-003	Midmark LR Operating Light	$2,825
153818-004	Midmark Console Mount Operating Light	2,825
153818-005	Midmark Console Mount Operating Light with Cut-out for Monitor Mount (A) (split light arm allows upper light arm rotation independent of monitor mount)	2,825
002-1836-00	Monitor Mount Clamp Post (B)	1,067

Options:

153808-001	Elevance® Power Supply	514
153799-001	LR Light Adapter Kit - For mounting a 153818-003 Light to an Elevance® Chair only without LR Unit* (includes LR arm mount, wiring harness and contoured transformer cover box)	1,050

For use with Ultra Chairs

Part #	Description	Price
153914-002	Midmark LR Operating Light*	$2,825
153818-004	Midmark Console Mount Operating Light*	2,825
153818-005	Midmark Console Mount Operating Light with Cut-out for Monitor Mount* (A) (split light arm allows upper light arm rotation independent of monitor mount)	2,825
002-1836-00	Monitor Mount Clamp Post (B)	1,067

Options:

153808-001	Power Supply	514
153650	LR Light Adapter Kit - For mounting a 153914-002 Light to an UltraComfort® or UltraTrim® Chair only without LR Unit* (includes LR arm mount, wiring harness and contoured transformer cover box)	1,050

** Requires power supply (153808-001)*

Midmark Operating Light - Halogen

For use on Biltmore Chairs

Part #	Description	Price
153937-001	Midmark Light for Asepsis 21® Console	$3,000
153937-003	Midmark Light for Asepsis 21® LR	3,216
002-0884-00	Mounting Kit, LR Light without LR Unit (includes APC and Light Transformer)	622

Options:

153154-01	Mount Kit for 153937-003 Light and 002-0884-00 Kit to Mount to Existing Biltmore Classic Chairs	505
153681	Large, Square J-Box.	473

BACK TO CONTENTS

Midmark Operating Light

Cabinet Mounted Light

Part #	Description	Price
CBML	Cabinet Mounted Light	$3,647

Includes:

153641-001 Cabinet Mount Assembly
153939-001 Flex Arm and Light Head Assembly

Wall Mounted Light

Part #	Description	Price
WAML	Wall Mounted Light	$3,647

Includes:

153640-001 Wall Mount Assembly
153939-001 Flex Arm and Light Head Assembly

Universal Mounted Light

- Designed to Fit Round Post with Bearing Inside Diameters of 1-3/4" or 1-3/8"

Part #	Description	Price
153639-001	Universal Mounted Light	$2,830

Options:

152538-01	48" Light Post with Chair Mount for Biltmore Classic	414
002-1716-00	48" Light Post Only	177
153040-01	Light Post to Mount to an Asepsis 21® Console	255
153697	Light Post to Procenter Console	255

BACK TO CONTENTS

Track Mounted Light

- Track Dimensions: 78" L x 10" W

Part #	Description	Price
TRML	Track Mounted Light	$4,433

Includes:

153656-001 Track/Trolley Assembly
153638-001 Flex Arm and Light Head Assembly

Specify Suspension Tube

Part#	Ceiling Height	Tube Length
153651-002	8' - 8'3"	(14" Tube)
153651-003	8'4" - 8'7"	(18" Tube)
153651-004	8'8" - 8'11"	(22" Tube)
153651-005	9' - 9'3"	(26" Tube)
153651-006	9'4" - 9'7"	(30" Tube)
153651-007	9'8" - 9'11"	(34" Tube)
153651-008	10' - 10'3"	(38" Tube)
153651-009	10'4" - 10'7"	(42" Tube)
153651-010	10'8"	(46" Tube)

Ceiling Mounted Light

Part #	Description	Price
CEML	Ceiling Mounted Light	$3,499

Includes:

153637-001 Ceiling Mounted Light

A: Trim Ring

Specify Suspension Tube

Part#	Ceiling Height	Tube Length
153936-001	8' - 8'3"	(10.25" Tube)
153936-002	8'4" - 8'7"	(14.25" Tube)
153936-003	8'8" - 8'11"	(18.25" Tube)
153936-004	9' - 9'3"	(22.25" Tube)
153936-005	9'4" - 9'7"	(26.25" Tube)
153936-006	9'8" - 9'11"	(30.25" Tube)
153936-007	10' - 10'3"	(34.25" Tube)
153936-008	10'4" - 10'7"	(38.25" Tube)
153936-009	10'8" - 10'11"	(42.25" Tube)
153936-010	11'	(46.25" Tube)

153676-001 Trim Ring (A) $39

3.25" Collar for use when the light mount and cover is mounted above a suspended ceiling.

BACK TO CONTENTS

Halogen Track Light Monitor

- Dual trolleys and counterbalanced flex arm for uncompromised positioning
- Balanced monitor mount assembly for effortless tilt and rotation
- Inputs include: VGA, 3.5 mm PC audio, coaxial cable, HDMI, S-Video, RCA composite Note: HDMI connections require an HDMI repeater (not included).
- 17" dental grade monitor with digital TV tuner and CC HD support: 480i, 480p, 720p, 1080i
- 230 VAC not available
- 11' minimum operatory depth required

Part #	Description	Price
153830-xxx	Track Light & Monitor (17" dental grade monitor and remote control)	$8,909
153829-xxx	Track Light & Monitor Mount Only* (A)	7,160

Note: Specify ceiling height by including dash numbers found in the table aside (I.e. 153830-003 is a Track Light & Monitor for a 9'0" ceiling)

	Ceiling Height
-000	8' – 8'2"
-001	8'3" – 8'6"
-002	8'7" – 8'10"
-003	8'11" – 9'2"
-004	9'3" – 9'6"
-005	9'7" – 9'10"
-006	9'11" – 10'2"
-007	10'3" – 10'6"
-008	10'7"

BACK TO CONTENTS

Midmark LED Operating Light

Standard Features

- Reduced Energy Usage
- Extremely Long Life (30,000 Hours)
- Filtered Composite Safe Setting
- 3 Axis of Rotation
- Automatic On/Off Setting
- Three Intensity Settings
- Fan-Free Low Temperature Operation

Specifications:

Operate Mode Color Temperature	5700 Kelvin
Operate Mode Intensity	1400, 1950, 2500 Foot Candles 15000, 21000, 27000 Lux
Composite Mode Color Temperature	4000 Kelvin
Composite Mode Intensity	2100 Foot Candles 22000 Lux
Pattern Size	3.3" x 7.5"

A: Midmark LED Console Mount Operating Light with Cut-out for Monitor Mount

B: Monitor Mount, Clamp Post

Midmark LED Operating Light

For use with Elevance Units

Part #	Description	Price
153901-002	Midmark LED LR Mount Operating Light - Elevance®	$3,890
153901-001	Midmark LED Console Operating Light - Elevance®	3,890
153901-006	Midmark LED Console Mount Operating Light - Elevance® with Cut-out for Monitor Mount (A) (split light arm allows upper light arm rotation independent of monitor mount)	3,890
002-1836-00	Monitor Mount Clamp Post (B)	1,067
153808-001	Elevance® Power Supply	514
153799-001	LR Light Adapter Kit - For mounting a 153901-002 Light to an Elevance® Chair only without LR Unit* (includes LR arm mount, wiring harness and contoured transformer cover box)	1,050

For use with Procenter units mounted to Elevance chairs

Part #	Description	Price
153901-003	Midmark LED LR Operating Light	$3,890
153901-004	Midmark LED Console Mount Operating Light	3,890
153901-005	Midmark LED Console Mount Operating Light with Cut-out for Monitor Mount (A) (split light arm allows upper light arm rotation independent of monitor mount)	3,890
002-1836-00	Monitor Mount Clamp Post (B)	1,067

Options:

153808-001	Elevance® Power Supply	514
153799-001	LR Light Adapter Kit - For mounting a 153901-003 Light to an Elevance® Chair only without LR Unit* (includes LR arm mount, wiring harness and contoured transformer cover box)	1,050

For use with Ultra chairs

Part #	Description	Price
153915-002	Midmark LED LR Operating Light	$3,890
153901-004	Midmark LED Console Mount Operating Light	3,890
153901-005	Midmark LED Console Mount Operating Light with Cut-out for Monitor Mount (A) (split light arm allows upper light arm rotation independent of monitor mount)	3,890
002-1836-00	Monitor Mount Clamp Post (B)	1,067

Options:

153808-001	Power Supply	514
153650	LR Light Adapter Kit - For mounting a 153915-002 Light to an UltraComfort® or UltraTrim® Chair only without LR Unit* (includes LR arm mount, wiring harness and contoured transformer cover box)	1,050

** Requires power supply (153808-001)*

LED Retrofit Kit

Bring the performance and efficiency of the Midmark LED operating light to any old Midmark light with our Retrofit Kits.

Standard Features

- Reduced Energy Usage
- Extremely Long Life (30,000 Hours)
- Filtered Composite Safe Setting
- 3 Axis of Rotation
- Automatic On/Off Setting
- Three Intensity Settings
- Fan-Free Low Temperature Operation

Part #	Description	Price
002-1530-00	Retrofit Kit for Track, Cabinet and Wall Mounted Midmark Operating Lights	$3,624
002-1534-00	Retrofit Kit for Ceiling Mounted Midmark Operating Lights	3,624
002-1536-00	Retrofit Kit for Universal Mounted Midmark Operating Lights	3,624

BACK TO CONTENTS

Midmark Operating Light

Cabinet Mounted LED Light

Part #	Description	Price
CBML-L	Cabinet Mounted LED Light	$4,540
Includes:		
153909-002	Cabinet Mount Assembly	
153903-001	Flex Arm and LED Light Head Assembly	

Wall Mounted LED Light

Part #	Description	Price
WAML-L	Wall Mounted LED Light	$4,540
Includes:		
153908-002	Wall Mount Assembly	
153903-001	Flex Arm and LED Light Head Assembly	

Universal Mounted LED Light

- Designed to Fit Round Post with Bearing Inside Diameters of 1-3/4" or 1-3/8"

Part #	Description	Price
153904-002	Universal Mounted LED Light	$4,060

Options:

152538-01	48" Light Post with Chair Mount for Biltmore Classic	414
002-1716-00	48" Light Post Only	177
153040-01	Light Post to Mount to an Asepsis 21® Console	255
153697	Light Post to Procenter Console	255

BACK TO CONTENTS

Midmark LED Operating Light

Track Mounted LED Light

- Track Dimensions: 78" L x 10" W

Part #	Description	Price
TRML-L	Track Mounted LED Light	$5,407

Includes:

153910-002	Track/Trolley Assembly
153903-001	Flex Arm and LED Light Head Assembly

Specify Suspension Tube

Part#	Ceiling Height	Tube Length
153651-002	8' - 8'3"	(14" Tube)
153651-003	8'4" - 8'7"	(18" Tube)
153651-004	8'8" - 8'11"	(22" Tube)
153651-005	9' - 9'3"	(26" Tube)
153651-006	9'4" - 9'7"	(30" Tube)
153651-007	9'8" - 9'11"	(34" Tube)
153651-008	10' - 10'3"	(38" Tube)
153651-009	10'4" - 10'7"	(42" Tube)
153651-010	10'8"	(46" Tube)

LED Light Head

Ceiling Mounted LED Light

Part #	Description	Price
CEML-L	Ceiling Mounted LED Light	$4,496

Includes:

153905-002	Ceiling Mounted LED Light

Specify Suspension Tube

Part#	Ceiling Height	Tube Length
153936-001	8' - 8'3"	(10.25" Tube)
153936-002	8'4" - 8'7"	(14.25" Tube)
153936-003	8'8" - 8'11"	(18.25" Tube)
153936-004	9' - 9'3"	(22.25" Tube)
153936-005	9'4" - 9'7"	(26.25" Tube)
153936-006	9'8" - 9'11"	(30.25" Tube)
153936-007	10' - 10'3"	(34.25" Tube)
153936-008	10'4" - 10'7"	(38.25" Tube)
153936-009	10'8" - 10'11"	(42.25" Tube)
153936-010	11'	(46.25" Tube)

153676-001	Trim Ring (A)	$39

3.25" Collar for use when the light mount and cover is mounted above a suspended ceiling.

A: Trim Ring

BACK TO CONTENTS

Midmark LED Track Light Monitor

LED Track Light Monitor

Part #	Description	Price
153907-xxx	LED Track Light & Monitor (17" dental grade monitor and remote control)	$9,831
153906-xxx	LED Track Light & Monitor Mount Only* (A)	8,082

Note: Specify ceiling height by including dash numbers found in the table aside (I.e. 153907-013 is a LED Track Light & Monitor for a 9'0" ceiling)

	Ceiling Height
-010	8' – 8'2"
-011	8'3" – 8'6"
-012	8'7" – 8'10"
-013	8'11" – 9'2"
-014	9'3" – 9'6"
-015	9'7" – 9'10"
-016	9'11" – 10'2"
-017	10'3" – 10'6"
-018	10'7"

A: Monitor Mount

*Monitor Requirements:
12V
VESA mount
Weight 5 to 13 lbs
Maximum Horizontal Width of 18.5"

BACK TO CONTENTS

Dentist's Stool

Standard Features

- Contoured Seat with Raised Front
- Waterfall Front Edges
- Up to Twelve Degrees of Forward Tilt
- One Lever Adjustment for Locking Seat and Backrest Tilt
- Ratcheted Backrest for Height Adjustment without Knobs
- Cylinder Height: Standard - 16.5" to 22", Short - 15.25" to 18.3", Tall - 20.9" to 28.7"
- Seat Size: Standard - 17.5" x 16.5" Small - 16.25" x 16"
- Vinyl Upholstery Standard

Part #	Description	Price
153811	Dentist's Stool	$830
Options:		
154135	Upcharge for Ultraleather™ Upholstery, Standard Colors	168
154136	Upcharge for Non-Standard Upholstery Colors	77
153820	Adjustable Armrests	209

Height

Swivel

Slide

Assistant's Stool

Standard Features

- Contoured Seat with Raised Front
- Waterfall Front Edges
- Ratchet Release Body Support with Height Adjustment (specify right or left arm, left arm shown)
- Integrated Footrest, Automatically Adjusts with Seat Height
- Cylinder Height: 21.7" to 27.5"
- Seat Size: 16.25" x 16"
- Vinyl Upholstery Standard

(Shown with optional lumbar support)

Part #	Description	Price
153812	Assistant's Stool	$965
Options:		
154135	Upcharge for Ultraleather™ Upholstery, Standard Colors	168
154136	Upcharge for Non-Standard Upholstery Colors	77
153822	Adjustable Lumbar Support (factory installed)	220

Accessories - Handpiece Illumination

Fiber Optic Tubing

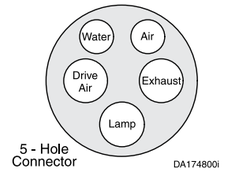

ISO-C Fiber Optic Tubing

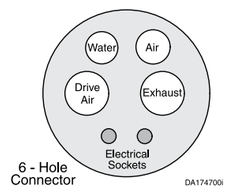

Handpiece Illumination System

- Powers Up to Four Handpiece Circuits
- Output Voltage can be Adjusted From 3-4 VDC
- Individual Output Adjustment for Each Handpiece Circuit
- Transformer Included

BACK TO CONTENTS

Accessories - Scalers

Dentsply Cavitron

- Magnetostrictive Scaler
- SPS Technology Automatically Adjusts System Power to Maintain Tip Stroke, Compensating for Load and Conditions
- 30 KHz Insert Included
- On/Off Controlled Through Rheostat

Part #	Delivery System	Price
153921-001	Elevance Continental-Style Delivery System - Factory Installed	$2,833
153921-002	Elevance Continental-Style Delivery System - Field Installed	3,233
153781-001	Elevance Traditional Delivery System - Factory Installed	2,833
153781-002	Elevance Traditional Delivery System - Field Installed	3,233
153764-001	Procenter Delivery System (Chair Mounted & Side Delivery)	2,833
153764-002	Procenter Freestanding Treatment Console Mounted	2,833

SATELEC® SP Newtron™

- 5th Generation Piezo Ultrasonic Instrument
- Compact, Lightweight and Autoclavable
- Color Coding System to Ensure Proper Tip and Power Setting
- "Cruise Control" for Automatic Regulation of Frequency and Power
- On/Off Controlled through Rheostat
- Three Tips Included (#1, 10Z, H3)

Part #	Delivery System - FIELD INSTALLED OPTIONS	Price
153782-003	Elevance Traditional Delivery System	$2,529
153782-004	Elevance Traditional Delivery System (LED Model)	3,318
153922-003	Elevance Continental-Style Delivery System	2,529
153922-004	Elevance Continental-Style Delivery System (LED Model)	3,318

BACK TO CONTENTS

Accessories - Electric Handpiece System

Bien Air MX2 LED

- Brushless, Autoclavable Motor
- Perfectly silent and very gentle to operate
- Motor Speed: 100 to 40,000 RPM
- Programmable High/Low RPM and Low RPM Torque Limits with Auto Reverse
- Quick-Connect Coupling Rotates Over 360 Degrees
- E Type Attachments
- Three-Year Warranty

Single Motor Systems

Part #	Delivery System	Price
153920-001	Elevance Continental-Style Delivery System	$4,416
153776-001	Elevance Traditional Delivery System	4,416
153900-001	Procenter Delivery System (Chair Mounted & Side Delivery) - Factory Installed	4,416
153900-005	Procenter Delivery System (Chair Mounted & Side Delivery) - Field Installed	4,416
153900-002	Procenter Freestanding Treatment Console Mounted - Factory Installed	4,416
153900-006	Procenter Freestanding Treatment Console Mounted - Field Installed	4,416

Dual Motor Systems

Part #	Delivery System	Price
153920-002	Elevance Continental-Style Delivery System	$7,288
153776-002	Elevance Traditional Delivery System	7,288
153900-003	Procenter Delivery System (Chair Mounted & Side Delivery) - Factory Installed	7,288
153900-007	Procenter Delivery System (Chair Mounted & Side Delivery) - Field Installed	7,288
153900-004	Procenter Freestanding Treatment Console Mounted - Factory Installed	7,288
153900-008	Procenter Freestanding Treatment Console Mounted - Field Installed	7,288

BACK TO CONTENTS

Accessories - Curing Light

SATELEC® Mini LED Curing Light

- 2nd Generation LED Curing Light combining power, efficiency and speed
- Wide Light Spectrum (420-480 nm)
- Three Modes of Cure (Fast, Pulse and Ramp)
- Includes Light Shield and 7.5mm Autoclavable Light Guide
- Stylish handpiece is compact, lightweight and well balanced
- Shock Resistant, Silent Operation, Easy to Clean

Part #	Delivery System	Price
153924-001	Elevance Continental-Style Delivery System	$1,645
153784-001	Elevance Traditional Delivery System	1,645
153784-002	Elevance Assistant's Instruments	1,645
153766	Procenter Delivery System, (Chair Mounted & Side Delivery), Factory Installed	1,645
153766-001	Procenter Delivery System, (Chair Mounted & Side Delivery), Field Installed	1,645
153766-002	Procenter Freestanding Treatment Console Mounted, Delivery System, Factory Installed	1,645
153766-006	Procenter Freestanding Treatment Console Assistant's Instruments, Factory Installed	1,645
153766-004	Procenter Assistant's Instruments, Factory Installed	1,645
153766-005	Procenter Assistant's Instruments, Field Installed	1,645

BACK TO CONTENTS

Accessories - Intraoral Cameras

SOPRO Cameras

- Sopro Touch Allows for Easy Image Capture Without Blurring
- Lightweight and Easy to Clean
- Analog and Digital (USB 2.0) Compatible

**Requires a docking station*

617 Camera

- Wide 105 Degree Angle of View (easy to see distal areas)
- Curved Design which Follows the Natural Shape of the Mouth
- High Fidelity Images
- Latest Generation of LEDs Utilizing Condensors to Focus Light with Minimal Shadowing
- Fixed-Focus and Large Depth of Field (portrait down to a single tooth)

Part #	Price
153831-001	$3,955

717 First Camera

- 3 Viewing modes - Macro 0-5mm, Intraoral 5-30 mm, Extraoral 30mm+
- Up to 115x image magnification in macro mode
- Exceptional image quality due to digital signal processor

Part #	Price
153831-006	$4,707

SoproLIFE® Camera

- 3 modes to optimize your dental practice
- Diagnosis aid mode – shows the characterization of lesions at different clinical stages without losing consistency
- Treatment aid mode – images will show a differentiation of pre-operative healthy tissue versus diseased tissue
- “DAYLIGHT” mode – allows the dentist to use SoproLIFE® as a white light intra-oral camera to produce high-quality images

Part #	Price
153831-005	$6,739

SoproCARE® Camera

- Intraoral camera function with fluorescence-based caries detection system
- Fluorescence-based plaque, calcium, and gingival inflammation detection system

Part #	Price
153831-012	$6,739

BACK TO CONTENTS

Notes

BACK TO CONTENTS

Junction Box

Contoured Junction Box - Elevance Chairs

Part #	Description	Price
153805-101	Contoured Junction Box, with Regulators	$1,155
002-1832-00	Contoured Junction Box, Housing Only	585

Contoured Junction Box

Part #	Description	Price
153605-004	Contoured Junction Box, with Regulators	$1,155
002-0837-00	Contoured Junction Box, Housing Only	585

Square Junction Box

Part #	Description	Price
153605-003	Square Junction Box - Midmark with Regulators	$890
002-1637-01	Square Junction Box, Housing Only	328

Small Junction Box

Part #	Description	Price
029-2667-00	Small Junction Box	$890
002-1637-00	Small Junction Box, Housing Only	218

BACK TO CONTENTS

Tray Arm System for Procenter

- For 9" x 13" Tray

Part #	Description	Price
153634-001	Tray Arm System for Instrument Delivery System (Field Installed)	$410

Remote Procenter Chair Control Kit

- For Under Counter Mounting
- Includes 15' of Cable

Part #	Description	Price
002-0703-00	Remote Chair Control Kit for Ultra Chairs	$399
002-0703-01	Remote Chair Control Kit, for Elevance Chair	399

BACK TO CONTENTS

Midmark 641 Oral Surgery Chair

Standard Features

- Power Height, Back, Foot and Tilt
- 450-pound Patient Weight Capacity
- 19-inch to 40-inch Seat Height Adjustment (Non-rotation Models)
- 22.5-inch to 43.5-inch Seat Height Adjustment (Rotation Models)
- Perimeter Contouring for Maximum Access to Patient
- Flip-out Foot Extension
- Hand and Foot Control Standard
- Paper Roll Holder Standard
- Contoured Headrest Standard
- Choice of Premium Seamless or Ultra-Premium Plush Upholstery
- Meets UL 60601-1 and CAN/CSA C22.2 No. 601.1-M90 Standards
- Table Weight: 450 lb
- Shipping Weight: 500 lb

Part #	Description	Price
Standard Models		
641-002	Non-Programmable w/o Receptacle, w/o Top	$15,251
002-0966-00-XXX[1,9]	Upholstery Top - Premium	1,190
641-002	Non-Programmable w/o Receptacle, w/o Top	15,251
002-0968-00-XXX[1,9]	Upholstery Top - Ultra-Premium	1,575
641-003	Programmable w/ Receptacle, w/o Top	16,884
002-0966-00-XXX[1,9]	Upholstery Top - Premium	1,190
641-003	Programmable w/ Receptacle, w/o Top	16,884
002-0968-00-XXX[1,9]	Upholstery Top - Ultra-Premium	1,575
Rotation Models		
641-004	Non-Programmable w/ Rotation, w/o Top	17,867
002-0966-00-XXX[1,9]	Upholstery Top - Premium	1,190
641-004	Non-Programmable w/ Rotation, w/o Top	17,867
002-0968-00-XXX[1,9]	Upholstery Top - Ultra-Premium	1,575
641-005	Programmable w/ Rotation, w/o Top	19,500
002-0966-00-XXX[1,9]	Upholstery Top - Premium	1,190
641-005	Programmable w/ Rotation, w/o Top	19,560
002-0968-00-XXX[1,9]	Upholstery Top - Ultra-Premium	1,575

BACK TO CONTENTS

Midmark 641 Oral Surgery Chair

Accessories	Description	Price
Arms/Armboards		
9A179002-XXX[1,10]	Fixed Armboard	$745
9A396001-XXX[1,5, 10]	Chair Arms, Premium Upholstery	1,260
9A398001-XXX[1,5, 10]	Chair Arms, Ultra-Premium Upholstery	1,375
9A81001-XXX[1,10]	Articulating Armboard	1,570
Casters		
9A330001[2]	Caster base	1,010
9A365001[2]	Casters	585
Controls		
9A408001[3]	Wireless Control, Non-Programmable, Linear-Style, Plant Installed	1,175
9A408002[3]	Wireless Control, Programmable, Linear-Style, Plant Installed	1,175
Headrests		
9A378001-XXX[1, 10]	Flat Headrest, Premium Upholstery	280
9A380001-XXX[1, 10]	Flat Headrest, Ultra-Premium Upholstery	375
9A386001-XXX[1,4, 10]	Oval-Shaped Headrest, Premium Upholstery	335
9A388001-XXX[1,4, 10]	Oval-Shaped Headrest, Ultra-Premium Upholstery	395
9A390001-XXX[1,4, 10]	Rectangular-Shaped Headrest, Premium Upholstery	385
9A392001-XXX[1,4, 10]	Rectangular-Shaped Headrest, Ultra-Premium Upholstery	444
9A394001-XXX[1, 10]	Magnetic Headrest, Premium Upholstery	399
9A395001-XXX[1, 10]	Magnetic Headrest, Ultra-Premium Upholstery	455
9A405001	Wrist Rest Support	450
Instrument Trays/IV Poles		
9A267003[6]	Instrument Tray, Double Arm	1,585
9A77001[6]	IV Pole	585
Miscellaneous		
9A152010	3' Power Cord	43
9A205003	Base Rails, Plant Installed	341
9A205004	Base Rails, Field Installed	341
9A406001	Security Straps, Plant Installed	460
9A406002	Security Straps, Field Installed	460
9A416001	Foot Section Cover	83

[1] - See Color Code Chart
[2] - Not Available on Rotation Models
[3] - Accessory Supplied with Hand and Foot Control (Batteries Included)
[4] - Not Compatible with Wrist Rest Support Accessory
[5] - Interference with Armboard Accessories will Likely Occur
[6] - Requires 9A20500x Base Rail
[7] - Requires 9A26700x Instrument Tray Arm
[8] - See product price sheet for Ultra-Premium color availability and price

Options

[9] - Special Upholstery Color for Table	$262
[10] - Special or Ultra-Premium Upholstery Color for Accessory	53

Color Code Chart

Solid Premium Colors		Pattern Premium Colors		Ultra-Premium Colors[8]	
235	Blueberry	247	Belagio	228	Ultra-Raven Wing
236	Silver Sage	248	Siena	241	Ultra-Pacific Blue
237	Tea Green	249	Tuscany	242	Ultra-Spruce
238	Fossil Grey	250	Firenze	243	Ultra-Olivine
239	Cashmere Blue	251	Capri	244	Ultra-Arctic
240	Terra Cotta	252	Treviso	245	Ultra-Sky
312	Black			246	Ultra-Canyon

BACK TO CONTENTS

250 LED Exam Light

Standard Features

- LED technology for up to 25,000 hours of useful life
- 45% less energy consumed than equivalent halogen lights
- 4,000K color temperature
- 1,800 foot candle intensity (19,375 lux)
- UL6060-1 and CAN/CSA C22.2 No. 601.1-M90
- Exam light weight: 20 lb
- Shipping weight: 25 lb

Part #	Description	Price
250-002	LED Exam Light	$457
9A274001	Caster Base Accessory	62

Midmark 255 LED Procedure Light

- IEC/ES 60601-1, CAN/CSA C22.2 60601-1, 60601-2-41, CE Medical Device Directive, RoHS European Directive
- 4400K Color Temperature
- 7,500 Fc at 1 meter (39") focal length
- Effortless Positioning
- Procedure light weight: 65 lb (118 lb for dual light)
- Shipping weight: 120 lb (190 lb for dual light)

Single Ceiling Mount

Part #	Description	Price
255-001	Single Light 8' Ceiling	$3,795
255-002	Single Light 9' Ceiling	3,795
Options:		
9A584001	Conversion Kit with Cover*	$165

** To convert an existing single light system to a dual system, the above kit must be ordered in addition to a second 8' or 9' system listed above.*

Midmark 255 LED Procedure Light

- IEC/ES 60601-1, CAN/CSA C22.2 60601-1, 60601-2-41, CE Medical Device Directive, RoHS European Directive
- 4400K Color Temperature
- 7,500 Fc at 1 meter (39") focal length
- Effortless Positioning
- Procedure light weight: 65 lb (118 lb for dual light)
- Shipping weight: 120 lb (190 lb for dual light)

Dual Ceiling Mount

Part #	Description	Price
255-003	Dual Light 8' Ceiling	$7,590
255-004	Dual Light 9' Ceiling	7,590

Ceiling Mount Adapter Kit

- To Convert an 8' or 9' System to a 10' Mount Height
- One Required per Light Arm

Part #	Description	Price
002-1865-00	10' Ceiling Mount Adapter Kit	$390

Wall Mount

Part #	Description	Price
255-006	Wall Mount Light	$4,285

Midmark 255 LED Mobile Procedure Light

Part #	Description	Price
255-005	Dual Mobile Light 8' Ceiling	$3,795

Details, drawings, key features, options and specifications can be found in the Integra™ Dental Casework section of the price book.

12' Steri-Center

Part #	Description	Price
STERI12L	Integra™ 12' Steri-Center with standard Laminate top	$19,665
STERI12C	Integra™ 12' Steri-Center with Corian® top	22,384

10' Steri-Center

Part #	Description	Price
STERI10L	Integra™ 10' Steri-Center with standard Laminate top	$17,372
STERI10C	Integra™ 10' Steri-Center with Corian® top	20,468

8' Steri-Center

Part #	Description	Price
STERI8L	Integra™ 8' Steri-Center with standard Laminate top	$14,655
STERI8C	Integra™ 8' Steri-Center with Corian® top	16,847

Details, drawings, key features, options and specifications can be found in the Artizan® Expressions section of the price book.

12' Streamline Center

Part #	Description	Price
SC144-200	Artizan® Freestanding 12' Streamline Center	$22,439

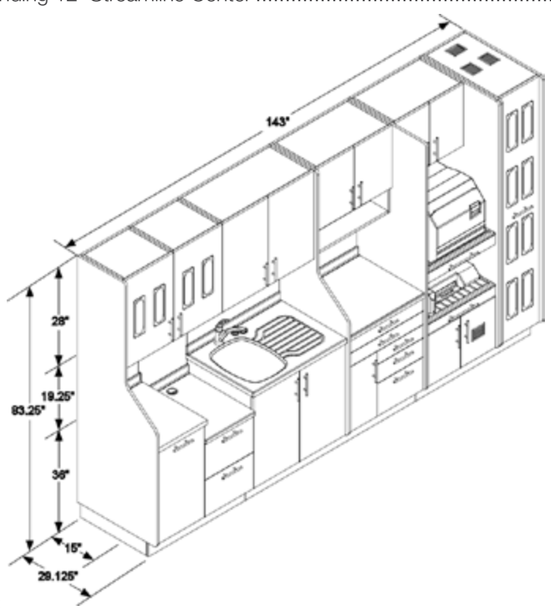

BACK TO CONTENTS

10' Streamline Center

Part #	Description	Price
SC120-200	Artizan® Freestanding 10' Streamline Center	$18,098

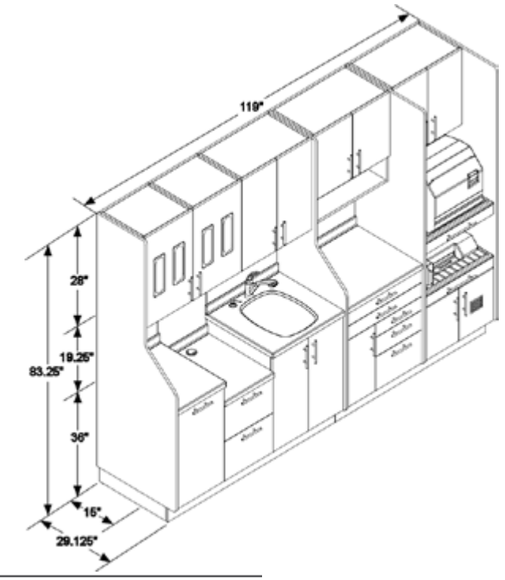

8' Streamline Center

Part #	Description	Price
SC96-200	Artizan® Freestanding 8' Streamline Center	$16,214

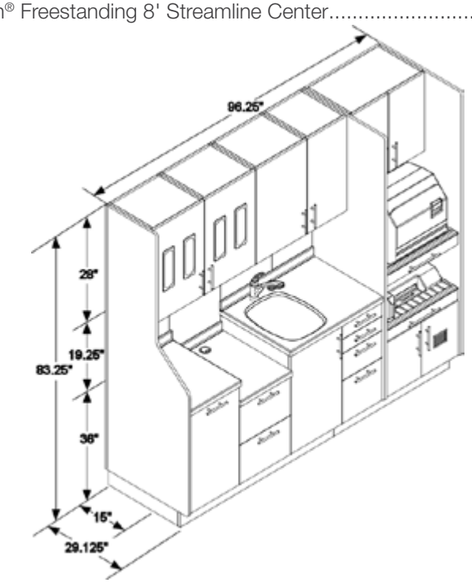

BACK TO CONTENTS

M11 UltraClave® Automatic Sterilizer

- Automatic door
- Chamber size: 11" x 18"
- Sterilizer weight: 99 lb (44.9 kg)
- Shipping weight: 131 lb (59.4 kg)
- UL 61010-1, 2nd edition
- IEC 61010-2-040, 1st edition
- CAN/CSA C22.2 No. 61010-1, 2nd edition
- CSA C22.2 No. 61010-2-040-07 Part 2-040, 1st edition
- ASME Certified

Part #	Description	Price
M11-020	Midmark M11 UltraClave® (115V).....	$7,830
M11-021	Midmark M11 UltraClave® (230V).....	7,830

M9 UltraClave® Automatic Sterilizer

- Automatic door
- Chamber size: 9" x 15"
- Sterilizer weight: 73 lb (33.1 kg)
- Shipping weight: 81 lb (36.7 kg)
- UL 61010-1, 2nd edition
- IEC 61010-2-040, 1st edition
- CAN/CSA C22.2 No. 61010-1, 2nd edition
- CSA C22.2 No. 61010-2-040-07 Part 2-040, 1st edition
- ASME Certified

Part #	Description	Price
M9-020	Midmark M9 UltraClave® (115V).....	$6,388
M9-021	Midmark M9 UltraClave® (230V).....	6,388

Midmark Sterilizers

M3 UltraFast® Automatic Sterilizer

- Automatic door
- Chamber size: 7.6" x 12.1" x 1.6"
- Sterilizer weight: 72 lb (31.2 kg)
- Shipping weight: 80 lb (36.3 kg)
- UL 61010A-1, 2nd edition
- IEC 61010-2-040
- CAN/CSA C22.2 No. 61010-1, 2nd edition
- CSA C22.2 No. 61010-2-040
- FCC Part 15, Sub-part B
- ASME Certified

Part #	Description	Price
M3-001	Midmark M3 Ultrafast® (115V).....	$6,643
M3-002	Midmark M3 Ultrafast® (230V).....	6,643

Midmark Sterilizer Accessories

	Pouch Rack	Cool Hand Tool	Printer	Deep Tray	Horizontal Cassette Rack	Vertical Cassette Rack
M11/M11D	√	√	√	√	√	√
M9/M9D	√	√	√	√		
M3			√			

Racks

Part #	Description	Price
9A226001	Pouch Rack (A)	$83
9A215001	M11 Horizontal Cassette Rack - Holds four Large and four Small Cassettes (B)	225
9A215002	M11 Vertical Cassette Rack - Holds four Large and four Small Cassettes (C)	225

A: Pouch Rack
12" L x 4.5" W x 3" H

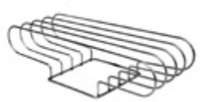

B: Horizontal Cassette Rack
Holds 4 - 8" x 11" & 4 - 3" x 8" cassettes
15.2" L x 8.6" W x 8" H

C: Vertical Cassette Rack
Holds 4 - 8" x 11" & 4 - 3" x 8" cassettes
15.5" L x 9.25" W x 8.75" H

Accessories

Part #	Description	Price
9A401001	M3 Printer (G)	$817
9A402001	M3 Door Tray	339
9A404001	M3 Top Cover Mat	81
9A224001	M9 Deep Tray (E)	121
9A225001	M11 Deep Tray (E)	157
9A307001	Cool Handtool (Tray and Cassette Removal Tool) (F)	43
9A259001	M9/M11 Impact Dot Matrix Printer (H)	718
002-0396-00	SpeedClean (One 16 oz. Bottle) (I)	39
002-0396-05	One Case SpeedClean (Twelve 16 oz. Bottles)	164

E: Deep Tray
M9: 13.25" L x 7.25" W x 2.5"H
M11: 16" L x 9.15" W x 3.25"H

F: Cool Handtool
8.5" L

G: M3 Printer

H: Impact Dot Matrix Printer
7.5" L x 4.4" W x 2.25" H

I: SpeedClean
8" H

Soniclean® Ultrasonic Cleaners

Soniclean® Ultrasonic cleaners are not designed to be recessed into the countertop

Soniclean® M150 Ultrasonic Cleaner

- Tank Capacity: 1.5 gal. (5.7 L)
- Tank Size: 11.5" x 6" x 6" (292.1 x 152.4 x 152.4 mm)
- Overall Size: 16" x 12" x 14.5" (406.4 x 304.8 x 368.3 mm)
- Soniclean® weight: 14 lb (6.4 kg)
- Shipping weight: 17 lb (7.7 kg)
- CSA, TUV, FCC; ISO 9001 Registered
- Does not include required safety basket accessory

Part #	Description	Price
M150-001	Midmark M150 Ultrasonic Cleaner for M150-001 (115V)	$1,327
M150-002	Midmark M150 Ultrasonic Cleaner (230V)	1,327

Soniclean® M250 Ultrasonic Cleaner

- Tank Capacity: 2.5 gal. (9.51 L)
- Tank Size: 11.5" x 9.5" x 6" (292.1 x 241.3 x 152.4 mm)
- Overall Size: 16" x 15.5" x 14.5" (406.4 x 393.7 x 368.3 mm)
- Soniclean® weight: 16 lb (17.3 kg)
- Shipping weight: 20 lb (9.1 kg)
- CSA, TUV, FCC; ISO 9001 Registered
- Does not include required safety basket accessory

Part #	Description	Price
M250-001	Midmark M250 Ultrasonic Cleaner for M250-001 (115V)	$2,095
M250-002	Midmark M250 Ultrasonic Cleaner (230V)	2,095

Soniclean® Ultrasonic Cleaners

Soniclean® M550 Ultrasonic Cleaner

- Tank Capacity: 5.5 gal. (20.81 L)
- Tank Size: 19.5" x 11.5" x 6" (495.3 x 292.1 x 152.4 mm)
- Overall Size: 24" x 18" x 14.5" (609.6 x 457.2 x 368.3 mm)
- Soniclean® weight: 28 lb (12.7 kg)
- Shipping weight: 40 lb (18.1 kg)
- CSA, TUV, FCC; ISO 9001 Registered
- Does not include required safety basket accessory

Part #	Description	Price
M550-001	Midmark M550 Ultrasonic Cleaner	$3,987
M550-002	Midmark M550 Ultrasonic Cleaner (230V)	3,987

Ultrasonic Cleaning Solutions

Part #	Description	Price
9A296001	Midmark General Purpose Cleaner (32 oz.)	$84
9A297001	Midmark Tartar and Stain Remover (32 oz.)	84
9A298001	Midmark Enzymatic Cleaner (32 oz.)	84

BACK TO CONTENTS

Soniclean® Ultrasonic Cleaner Accessories

Accessory Kit

- Includes safety basket, safety basket lid, beakers, beaker positioning cover with rings and beaker lids.

Part #	Description	Price
9A285001	M150 Accessory Kit	$381
9A286001	M150 Accessory Kit with Half Basket	356
9A287001	M250 Accessory Kit	544
9A288001	M250 Accessory Kit with Half Basket	391
9A289001	M550 Accessory Kit	922

M250 Accessory Kit with Half Basket

Safety Basket

Part #	Description	Price
9A290001	M150 Safety Basket	$207
9A292001	M250 Safety Basket	394
9A294001	M550 Safety Basket	488

M250 Safety Basket shown

Half Basket

Part #	Description	Price
9A291001	M150 Half Basket w/lid	$189
9A293001	M250 Half Basket w/lid	191

M250 Half Basket shown

Cassette Rack

Part #	Description	Price
9A295001	M250 Cassette Rack • Holds Three Large IMS Cassettes	$295

*The M250 Soniclean® will not accept the standard 8"x11" HuFriedy® cassette. A special HuFriedy® 8"x10.5" cassette (Part# IM416Q) is available for use in the M250 Soniclean®

9A407001	M550 Cassette Rack • Holds Six Large IMS Cassettes	374

M250 Cassette Rack shown

BACK TO CONTENTS

Contents

Policies

Warranty 5
Service/Repair Policy 107

Air Compressor Systems

PowerAir® Oil-less Air Compressors 108-109

Vacuum Systems

PowerVac® G Dry Vacuums 110-111
PowerVac® G Dry Vacuums - System Packages and Operating Cost 112-113
PowerVac® Dry Vacuums 114-115
PowerVac® Quick Reference Chart 116
ClassicSeries® Wet-Ring Vacuums 117-118
PowerAir®/Classic Series® System Packages 119-120
Air Compressor Accessories 121
Amalgam Separator 122
Vacuum Accessories 123-125

Air Compressor and Vacuum Accessories

Control Panels 126
Water Filter Bypass Systems 126
Low Voltage Control Relays 127
Voltage Buck and Boost Transformers 127
StackRack 128
Vacuum and Compressor Lifting Handles 128
Low Voltage Control Pilot Relays 128

Oral Surgery Systems

Power Max Surgical Vacuums 129-130
Evacuation Filters 131

BACK TO CONTENTS

Service/Repair Policies

Midmark offers evaluation and repair service on Midmark wet-ring vacuums..

Vacuum repairs will fall into one of the two categories below. The customer will be notified which repair is needed prior to any repairs being completed.

Description	List Price
Midmark Classic Series® Wet-Ring Vacuums – without motor	**$1,080**
Complete disassembly and inspection of all components. Replace motor bearings, water seal and all other seals. Replace other components (except motor) as needed to bring unit to specification. Reassemble and performance test unit. 6-month warranty.	
Midmark Classic Series® Wet-Ring Vacuums – with motor	**$1,855**
Same as above including motor replacement instead of motor bearing and seal replacements. 1-year warranty.	

Note: Repair charges for all other items are based on parts and labor. Estimates are provided on request.

Authorization must be obtained for products that are being returned for repair. Contact 1-800-MIDMARK, ext. 88923, for Dental Customer Experience to receive authorization RMA number. Specify the RMA number on the outside of the box and label it to the attention of Repair Service Center. Product must be packaged properly to avoid damage. Freight charges for return shipment will be added to invoice.

Return Address:
Repair Service Center
Midmark Corporation
Plant B
St. Rt. 47 W
Versailles, OH 45380

BACK TO CONTENTS

Imaging
Elevance®
Ultra/Procenter
Biltmore/ Asepsis
Lights/ Monitors
Stools
Accessories
Oral Surgery
Instrument Processing
Air & Vacuum
Integra™ Casework
Artizan® Furniture

PowerAir® - Oil-Less Air Compressors

- Industry-Leading Performance
- Quiet Operation
- Coalescent-Filtered Compressed Air
- Fresh Air Intake
- Unmatched, Exclusive Product Warranty

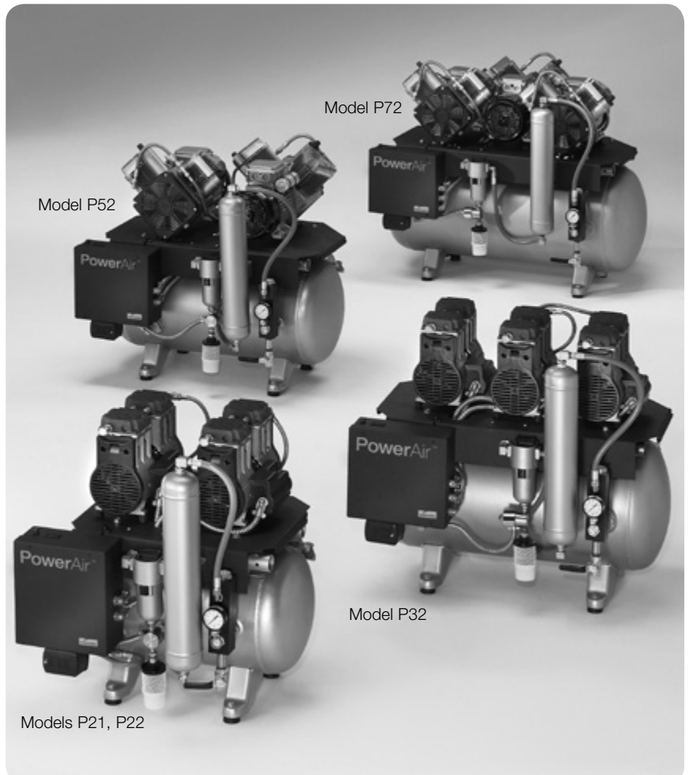

Sound covers allow for extremely quiet compressor operation. Includes high output cooling fans and quick-connect electrical plug (optional accessory).

500 times more stringent than NFPA 99C standards, all PowerAir® oil-less compressors include a .01 micron coalescent filter to provide ultra-clean air.

A unique exhaust silencer/ filter keeps noise levels low and filters purge air to a nearby drain, allowing for a cleaner mechanical room environment.

Simple and effective, the service access manifold houses all critical compressor operating controls in one convenient location.

ISO 9001:2000
FM 40049

To calculate dental user capacity:
Please note that the user capacity listed for each model is based on typical combinations of dentists, dental hygienists, dental assistants and handpiece lubrication stations that can work simultaneously in a conventional dental office setting. User satisfaction is a subjective matter. Ratings are shown for planning purposes only. For laboratory applications, contact Midmark Technical Service for proper sizing.

PowerAir® - Oil-Less Air Compressors

Midmark PowerAir® Models

Model/Order No.	P21	P22	P32	P52	P72
List Price	$6,215	$6,215	$8,715	$10,410	$14,135
User Capacity	1-3	1-3	3-5	5-7	7-10
CFM @ 80psi	5.2	5.2	7.8	10.6	15.9
No. of Heads	2	2	3	2	3
Total Horsepower	1.5	1.5	2.25	3.2	4.8
Voltage	115	208-230	208-230	208-230	208-230
Line Frequency	60Hz	60Hz	60Hz	60Hz	60Hz
Total Amps	16.0	7.0	11.0	20.0	29.0
Circuit Breaker (Amp)	20	20	20	30	40
dBA	65	65	67	70	73
dBA with Sound Cover	60	60	62	65	68
Tank Capacity	10 gal	10 gal	20 gal	20 gal	32 gal
Size (H x W x D)	27" x 26" x 24"	27" x 26" x 24"	29" x 33" x 26"	31" x 33" x 26"	33" x 40" x 27"
Size with Sound Cover	32" x 26" x 26"	32" x 26" x 26"	33" x 33" x 28"	33" x 33" x 28"	39" x 40" x 30"
Temperature Range (°F)	40°-104°	40°-104°	40°-104°	40°-104°	40°-104°
Shipping Weight (lbs.)	285	285	360	410	500

Midmark PowerAir® Sound Covers

Order No.	77001603	77001604	77001605	77001605	77001606
List Price	$1,599	$1,599	$1,919	$1,919	$2,565

PowerVac® G is the first intelligent dry vacuum. It uses an intelligent energy management system that creates a new standard for all dental vacuums.

Energy Efficiency:
The industries first intelligent vacuum system reduces energy up to 83%.

Power/Performance:
With a specifically designed 3.0 HP motor matched to a revolutionary rotary claw vacuum pump, the PowerVac® G can produce up to 18" Hg continuously.

Zero Maintenance:
Due to its water-less and oil-less design, the PowerVac® G requires no routine maintenance. No filters, strainers or oil to check, change or replace make the PowerVac® G a true hassle-free dry vacuum.

Quiet Operation:
With a 48 db-A rating, the PowerVac® G operates at a pleasingly quiet sound level, allowing it to be conveniently located in an equipment room close to an operatory suite, staff lounge or doctor's office.

Upgradable Flexibility:
The PowerVac® G can be field-upgraded to accommodate nearly any dental practice growth, bringing complete confidence for the doctor and staff. An investment in the PowerVac® equals security for the long-term.

Unmatched Warranty:
The PowerVac® G backs up its robust, durable image with a warranty to match:

- 5-year/10,000-hour full product
- 10-year/20,000-hour rotary claw pump

UL/CUL Classified
NFPA 99-C level 3
Patent Pending

Single

Twin

PowerVac® G - Dry Vacuums

Single Specifications

Order No. Model	No. Users	No. Vacuums	Total HP	Vacuum (Hg")	Voltage	Total Amps	Dimensions Overall: H x W x D	Base : H x W x D Tank: H x W x D	Shipping Weight	List Price
G3	3-5	1	3	up to 18	208-230 60 Hz	20	59" x 22" x 22"	25" x 22" x 20" 34" x 22" x 22"	Base - 431 lb Tank - 90 lb	$13,930
G5	5-7	1	3	up to 18	208-230 60 Hz	20	59" x 22" x 22"	25" x 22" x 20" 34" x 22" x 22"	Base - 431 lb Tank - 90 lb	$16,580
G7	7-10	1	3	up to 18	208-230 60 Hz	20	59" x 22" x 22"	25" x 22" x 20" 34" x 22" x 22"	Base - 431 lb Tank - 90 lb	$19,345

Twin Specifications

Order No. Model	No. Users	No. Vacuums	Total HP	Vacuum (Hg")	Voltage	Total Amps	Dimensions Overall: H x W x D	Shipping Weight	List Price
G6	6-10	2	6	up to 18	208-230 60 Hz	20 x 2	59" x 56" x 22"	Base - 431 lb x 2 Tank - 90 lb x 2	$25,075
G10	10-14	2	6	up to 18	208-230 60 Hz	20 x 2	59" x 56" x 22"	Base - 431 lb x 2 Tank - 90 lb x 2	$28,185
G14	14-20	2	6	up to 18	208-230 60 Hz	20 x 2	59" x 56" x 22"	Base - 431 lb x 2 Tank - 90 lb x 2	$30,950

Accessories

Order No. Model	Description	List Price
62937303	Separation Tank Strainer - use to collect large debris in older/heavily contaminated vacuum lines. Note: One (1) Strainer is required per Separation Tank.	$95
002-1371-00	Conversion Kit - to convert two single units into a twin	$820

Upgrade Kits

Model	Order Number	List Price
G3-G5	002-1457-00	$4,175
G5-G7	002-1458-00	$4,175
G3-G7	002-1459-00	$7,560

* HVE = 1 vacuum user; SE = .5 vacuum user; N_2O Scavenger = .5 vacuum user
** Twin (G6, G10, G14) dimensions are with base units side by side with 12" space between units; base units may also be stacked

PowerAir®/PowerVac® G System Packages

PowerVac® G System Packages								
No. Users	Package Number	PowerAir® Oil-less Compressor	PowerVac® G Dry Vacuum	Sound Cover	Control Panel	Regular Price	Package Price	SAVE!
1-3	P22/G3	P22	G3		77001586	$20,448	$19,426	**$1,022**
1-3	P22SC/G3	P22	G3	77001604	77001586	$22,047	$20,945	**$1,102**
3-5	P32/G3	P32	G3		77001586	$22,948	$21,801	**$1,147**
3-5	P32SC/G3	P32	G3	77001605	77001586	$24,867	$23,624	**$1,243**
3-5	P32/G5	P32	G5		77001586	$25,598	$24,318	**$1,280**
3-5	P32SC/G5	P32	G5	77001605	77001586	$27,517	$26,141	**$1,376**
5-7	P52/G5	P52	G5		77001586	$27,293	$25,928	**$1,365**
5-7	P52SC/G5	P52	G5	77001605	77001586	$29,212	$27,751	**$1,461**
5-7	P52/G6	P52	G6		77001592	$35,874	$34,080	**$1,794**
5-7	P52SC/G6	P52	G6	77001605	77001592	$37,793	$35,903	**$1,890**
7-10	P72/G7	P72	G7		77001586	$33,783	$32,094	**$1,689**
7-10	P72SC/G7	P72	G7	77001606	77001586	$36,348	$34,531	**$1,817**
7-10	P72/G10	P72	G10		77001592	$42,709	$40,574	**$2,135**
7-10	P72SC/G10	P72	G10	77001606	77001592	$45,274	$43,010	**$2,264**

BACK TO CONTENTS

PowerVac® G - Dry Vacuums

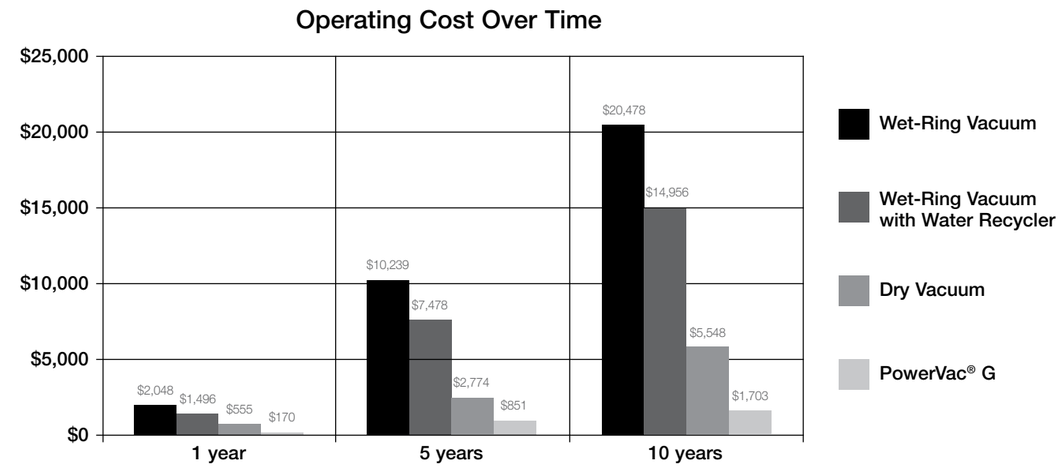

	Twin 1HP Wet-Ring Vacuum	Twin 1HP Wet-Ring Vacuum w/ Recycler	Dry Vacuum	PowerVac® G
Water & Electric Costs	$1,492	$938	$555	$170
Maintenance (filters)	$558	$558	$0	$0
Operating Cost Per Year	$2,050	$1,496	$555	$170
Water Used Per Year	120,000	42,000	0	0

BACK TO CONTENTS

PowerVac®, the first dry vacuum to combine the dental professional's most desired features into one space-saving, performance-driven system. The PowerVac® creates a new standard for dental dry vacuums.

Power/Performance:
With a specifically designed 2.0 HP motor matched to a revolutionary rotary claw vacuum pump, each PowerVac® unit can produce up to 18" Hg continuously.

Zero Maintenance:
Due to its water-less and oil-less design, the PowerVac® requires no routine maintenance. No filters, strainers or oil to check, change or replace make the PowerVac® a true hassle-free dry vacuum.

Quiet Operation:
With a 72 db-A rating, the PowerVac® operates at a pleasingly quiet sound level, allowing the PowerVac® to be conveniently located in an equipment room close to an operatory suite, staff lounge or doctor's office.

Upgradable Flexibility:
The PowerVac® can be field-upgraded to accommodate nearly any dental practice growth, bringing complete confidence for the doctor and staff. An investment in the PowerVac® equals security in the long-term.

Unmatched Warranty:
The PowerVac® backs up its robust, durable image with a warranty to match:

- 5-year/10,000-hour full product
- 10-year/20,000-hour rotary claw pump

UL/CUL Classified
NFPA 99-C level 3
Patent Pending

Single

Twin

PowerVac® - Dry Vacuums

Single Specifications

Order No. Model	No. Users	No. Vacuums	Total HP	Vacuum (Hg")	Voltage	Total Amps	Dimensions Overall: H x W x D	Base : H x W x D Tank: H x W x D	Shipping Weight	List Price
P3	3-5	1	2	up to 18	208-230 60 Hz	11.4	58" x 22" x 22"	26" x 19.5" x 18.5" 32" x 22" x 22"	Base - 402 lb Tank - 90 lb	$11,265
P5	5-7	1	2	up to 18	208-230 60 Hz	11.4	58" x 22" x 22"	26" x 19.5" x 18.5" 32" x 22" x 22"	Base - 402 lb Tank - 90 lb	$14,660
P7	7-10	1	2	up to 18	208-230 60 Hz	11.4	58" x 22" x 22"	26" x 19.5" x 18.5" 32" x 22" x 22"	Base - 402 lb Tank - 90 lb	$18,160

Twin Specifications

Order No. Model	No. Users	No. Vacuums	Total HP	Vacuum (Hg")	Voltage	Total Amps	Dimensions Overall: H x W x D	Shipping Weight	List Price
P6	6-10	2	4	up to 18	208-230 60 Hz	11.4 x 2	58" x 56" x 22"	Base - 402 lb x 2 Tank - 90 lb x 2	$21,400
P10	10-14	2	4	up to 18	208-230 60 Hz	11.4 x 2	58" x 46" x 22"	Base - 402 lb x 2 Tank - 90 lb x 2	$24,590
P14	14-20	2	4	up to 18	208-230 60 Hz	11.4 x 2	58" x 46" x 22"	Base - 402 l. x 2 Tank - 90 lb x 2	$27,295

Accessories

Order No. Model	Description	List Price
62937303	Separation Tank Strainer - use to collect large debris in older/heavily contaminated vacuum lines. Note: One (1) Strainer is required per Separation Tank.	$95
002-0939-00	Conversion Kit - to convert two single units into a twin	$705

Upgrade Kits

Model	Order Number	List Price
P3-P5	002-0935-00	$4,175
P5-P7	002-0936-00	$4,175
P3-P7	002-0937-00	$7,560

* Twin (P6, P10, P14) dimensions are with base units side by side with 12" space between units; base units may also be stacked.

PowerAir®/PowerVac® System Packages

PowerAir®/PowerVac® System Packages								
No. Users	Package Number	PowerAir® Oil-less Compressor	PowerVac® Dry Vacuum	Sound Cover	Control Panel	Regular Price	Package Price	SAVE!
1-3	P22/P3	P22	P3		77001586	$17,783	$16,894	**$889**
1-3	P22SC/P3	P22	P3	77001604	77001586	$19,382	$18,413	**$969**
3-5	P32/P3	P32	P3		77001586	$20,283	$19,269	**$1,014**
3-5	P32SC/P3	P32	P3	77001605	77001586	$22,202	$21,092	**$1,110**
3-5	P32/P5	P32	P5		77001586	$23,678	$22,494	**$1,184**
3-5	P32SC/P5	P32	P5	77001605	77001586	$25,597	$24,317	**$1,280**
5-7	P52/P5	P52	P5		77001586	$25,373	$24,104	**$1,269**
5-7	P52SC/P5	P52	P5	77001605	77001586	$27,292	$25,927	**$1,365**
5-7	P52/P6	P52	P6		77001592	$32,199	$30,589	**$1,610**
5-7	P52SC/P6	P52	P6	77001605	77001592	$34,118	$32,412	**$1,706**
7-10	P72/P7	P72	P7		77001586	$32,598	$30,968	**$1,630**
7-10	P72SC/P7	P72	P7	77001606	77001586	$35,163	$33,405	**$1,758**
7-10	P72/P10	P72	P10		77001592	$39,114	$37,158	**$1,956**
7-10	P72SC/P10	P72	P10	77001606	77001592	$41,679	$39,595	**$2,084**

ClassicSeries® - Wet-Ring Vacuums

- High Output, Proven Performance
- Durable Aluminum Bronze Construction
- Exclusive Internal Water Recycling
- Water Recycling By-Pass
- Stainless Steel Motor Shaft
- NFPA 99C Level-3 Compliant

Redesigned intake manifold allows for smooth air flow and greater efficiency.

Separate Twin Model On/Off switches and Hour Meters provide operational versatility.

"Quick Connect" hose connections allow for tool-free serviceability. Water Recycler By-Pass Valve provides extra protection against water mineral deposits.

ISO 9001:2000
FM 40049

To calculate dental user capacity:
Please note that the user capacity listed for each model is based on typical combinations of high-volume evacuators (HVE), saliva ejectors (SE) and nitrous oxide (N_2O) scavengers that can work simultaneously in a conventional dental office setting. Typically, each HVE equals 1 user, each SE equals 1/2 user, and each N_2O scavenger equals 1/2 user. User satisfaction is a subjective matter. Ratings are shown for planning purposes only. Piping length and configuration can affect vacuum performance. For specific applications, contact Midmark Technical Service for vacuum sizing recommendations.

ClassicSeries® - Wet-Ring Vacuums

Singles				
Order No.	CV3	CV3R	CV5	CV5R
List Price	$2,865	$3,340	$3,575	$4,060
Horsepower	1.25HP	1.25HP	2HP	2HP
Size (H x W x D)	15" x 12" x 13"	15" x 12" x 13"	17" x 12" x 13"	17" x 12" x 13"
User Capacity	3	3	5	5
Water Recycling	No	Yes	No	Yes
Voltage-Single Phase	115/230	115/230	230	230
Amperage	15.0/7.5	15.0/7.5	13	13
Circuit Breaker (Amp)	20	20	20	20
Line Frequency	50/60Hz	50/60Hz	50/60Hz	50/60Hz
Shipping Weight	70 lb	70 lb	76 lb	76 lb

Twins				
Order No.	CV6	CV6R	CV10	CV10R
List Price	$5,500	$6,090	$6,330	$6,935
Total Horsepower	2.5HP	2.5HP	4HP	4HP
Size (H x W x D)	18.5" x 25.5" x 20"	18.5" x 25.5" x 20"	18.5" x 25.5" x 20"	18.5" x 25.5" x 20"
User Capacity	6	6	10	10
Water Recycling	No	Yes	No	Yes
Voltage-Single Phase	115/230	115/230	230	230
Amperage/Vacuum	15.0/7.5	15.0/7.5	26/13	26/13
Circuit Breaker/Vacuum (Amp)	20 x 2	20 x 2	20 x 2	20 x 2
Line Frequency	50/60Hz	50/60Hz	50/60Hz	50/60Hz
Shipping Weight	188 lb	188 lb	208 lb	208 lb

BACK TO CONTENTS

PowerAir®/ClassicSeries® System Packages

PowerAir®/ClassicSeries® System Packages									
No. Users	Package Number	PowerAir® Oil-less Compressor	ClassicSeries® Wet-Ring Vacuum	Sound Cover	Water Filter/ Bypass System	Control Panel	Regular Price	Package Price	SAVE!
1-3	P21/CV3	P21(115V)	CV3		77002146	77001590	$10,744	$10,207	**$537**
1-3	P21/CV3R	P21(115V)	CV3R		77002146	77001590	$11,219	$10,658	**$561**
1-3	P21SC/CV3	P21(115V)	CV3	77001603	77002146	77001590	$12,343	$11,726	**$617**
1-3	P21SC/CV3R	P21(115V)	CV3R	77001603	77002146	77001590	$12,818	$12,177	**$641**
1-3	P22/CV3	P22	CV3		77002146	77001590	$10,744	$10,207	**$537**
1-3	P22/CV3R	P22	CV3R		77002146	77001590	$11,219	$10,658	**$561**
1-3	P22SC/CV3	P22	CV3	77001604	77002146	77001590	$12,343	$11,726	**$617**
1-3	P22SC/CV3R	P22	CV3R	77001604	77002146	77001590	$12,818	$12,177	**$641**
3-5	P32/CV5	P32	CV5		77002146	77001590	$13,954	$13,256	**$698**
3-5	P32/CV5R	P32	CV5R		77002146	77001590	$14,439	$13,717	**$722**
3-5	P32SC/CV5	P32	CV5	77001605	77002146	77001590	$15,873	$15,079	**$794**
3-5	P32SC/CV5R	P32	CV5R	77001605	77002146	77001590	$16,358	$15,540	**$818**
3-5	P32/CV6	P32	CV6		77002146	77001593	$15,952	$15,154	**$798**
3-5	P32/CV6R	P32	CV6R		77002146	77001593	$16,542	$15,715	**$827**
3-5	P32SC/CV6	P32	CV6	77001605	77002146	77001593	$17,871	$16,977	**$894**
3-5	P32SC/CV6R	P32	CV6R	77001605	77002146	77001593	$18,461	$17,538	**$923**

BACK TO CONTENTS

PowerAir®/ClassicSeries® System Packages

PowerAir®/ClassicSeries® System Packages (continued)

No. Users	Package Number	PowerAir® Oil-less Compressor	ClassicSeries® Wet-Ring Vacuum	Sound Cover	Water Filter/ Bypass System	Control Panel	Regular Price	Package Price	SAVE!
5-7	P52/CV6	P52	CV6		77002147	77001593	$18,497	$17,572	**$925**
5-7	P52/CV6R	P52	CV6R		77002147	77001593	$19,087	$18,133	**$954**
5-7	P52SC/CV6	P52	CV6	77001605	77002147	77001593	$20,416	$19,395	**$1,021**
5-7	P52SC/CV6R	P52	CV6R	77001605	77002147	77001593	$21,006	$19,956	**$1,050**
5-7	P52/CV10	P52	CV10		77002147	77001593	$19,327	$18,361	**$966**
5-7	P52/CV10R	P52	CV10R		77002147	77001593	$19,932	$18,935	**$977**
5-7	P52SC/CV10	P52	CV10	77001605	77002147	77001593	$21,246	$20,184	**$1,062**
5-7	P52SC/CV10R	P52	CV10R	77001605	77002147	77001593	$21,851	$20,758	**$1,093**
7-10	P72/CV10	P72	CV10		77002147	77001593	$23,052	$21,899	**$1,153**
7-10	P72/CV10R	P72	CV10R		77002147	77001593	$23,657	$22,474	**$1,183**
7-10	P72SC/CV10	P72	CV10	77001606	77002147	77001593	$25,617	$24,336	**$1,281**
7-10	P72SC/CV10R	P72	CV10R	77001606	77002147	77001593	$26,222	$24,911	**$1,311**

Air Compressor Accessories

Sound Reduction Covers

Easy to assemble and install. Fan wiring harness plugs into a built-in receptacle. Decreases compressor sound by 5 dBA.

Order No.	Description	List Price
77001603	Sound Cover for P21	$1,599
77001604	Sound Cover for P22	$1,599
77001605	Sound Cover for P32 & P52	$1,919
77001606	Sound Cover for P72	$2,565

Vacuum & Compressor Lifting Handles

Set of four heavy-gauge steel handles with foam comfort-grip hand-hold pads and attached lock pins.

Order No.	Description	List Price
77001455	Set of Four Handles	305

Tandem Compressor Kit

Allows for simultaneous operation of two Midmark Dental Air Compressors connected to a common operatory air supply line.

Order No.	Description	List Price
30186000	Tandem Compressor Kit	$715

Hg5 Series – Amalgam Separator

- ISO 11143 certified to greater than 99% effective
- Works with both wet and dry vacuum systems
- Clear, see through design makes it easy to check function and fill level
- Simple canister change and recycling process. Contact your dealer or SolmeteX® for details
- Use the Hg5 model in combination with the PowerVac® and PowerVac® G
- Use two Hg5 units with Twin PowerVac® or PowerVac® G systems

Hg5 Amalgam Separator Models

Order No.	Model	Users	List Price
002-1494-00	Hg5	1-10	$1,310
002-1495-00	Hg5 Mini	1-4	$1,310
002-1496-00	Hg5 HV	10-20	$4,010

PowerVac® G Mounting Kits

Order No.	Model	List Price
002-1522-00	Hg5 Mounting Kit for PowerVac® G	$380
002-1524-00	Mounting Kit for PowerVac® G with Hg5	$1,610

PowerVac® Mounting Kits

Order No.	Description	List Price
002-1521-00	Hg5 Mounting Kit for PowerVac®	$380
002-1523-00	Mounting Kit for PowerVac® with Hg5	$1,610

Vacuum Accessories

Dispos-A-Bowl

Dispos-A-Bowl is the safe, smart way to dispose of used vacuum filters and waste. To use, simply remove the new filter bowl, screen and gasket from the protective canister, unscrew the old filter and place it in the, now empty, protective canister. Re-attach the canister lid and use the red "Safety Tape" to seal the package. Dispose of the canister properly per local codes. Attach the new filter bowl, screen and gasket to your vacuum pump and you're back in business.

Order No.	Description	Quantity	List Price
77005167	3/4" Port Size	1	$20
77005177	3/4" Port Size	12	$198
For Vacuums:	**Midmark ClassicSeries®**	**Apollo**	**Matrx**
	CV3 - Single 1HP	Single 1 & 1.5HP	Single 1 & 2HP
	CV3R - Single 1HP Recycler	Triple 1 & 1.5HP	Single 2HP Bronze
	CV5 - Single 2HP		
	CV5R - Single 2HP Recycler		
77005180	1" Port Size	1	$26
77005181	1" Port Size	8	$176
For Vacuums:		**Apollo**	
		Single 2 & 3HP	
		Twin 1 & 1.5HP	
		Twin 2HP Bronze	
		Triple 2 & 3HP	
77005168	1-1/4" Port Size	1	$31
77005178	1-1/4" Port Size	8	$219
For Vacuums:	**Midmark ClassicSeries®**	**Apollo**	**Matrx**
	CV6 - Twin 1HP	Twin 2 & 3HP	Twin Platform 1 & 2HP
	CV6R - Twin 1HP Recycler		
	CV10 - Twin 2HP		
	CV10R - Twin 2HP Recycler		
77005169	1-1/2" Port Size	1	$36
77005179	1-1/2" Port Size	8	$263
For Vacuums:	**Midmark PowerVac®**	**Apollo**	**Matrx**
	For use with optional Separation Tank Strainer	Single & Twin DryVac	DryMax 4000 & 8000

Precision Clense Plus Vacuum System Cleaner

Precision Clense Plus attacks and dissolves organic waste and other residue in the entire evacuation system to keep it thoroughly clean, naturally disinfected and deodorized.

Order No.	Description	List Price
77000570	Case of 6, 64 oz. Dispensing Bottles	$363

Mineral Deposit Reducer Kit

The Mineral Deposit Reducer Kit is the solution to mineral deposit build-up problems found with all manufacturers' wet-ring vacuums located in regions with mineralized ground water or "hard water."

Order No.	Description	List Price
AVA82000	Mineral Deposit Reducer Kit	$303
PFM82000	Replacement Cartridge (Average life of cartridge is 1 year).	$84

Vacuum Silencer

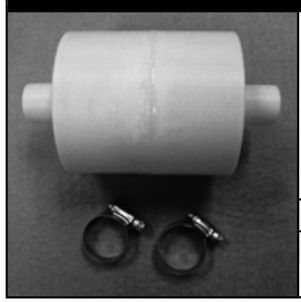

Provides for a quick, efficient means for quieting discharge noise from Midmark Wet-Ring Vacuums. Install directly in the vacuum discharge line.

Order No.	Description	List Price
77000040	Vacuum Silencer	$62
	*One per vacuum	

Air Water Separators

Order No.	Description	List Price
77000115	Air Water Separator/Muffler for Single Vacuums (2" PVC x 3/4" NPT) - Wall Mount	$292
77000246	Air Water Separator/Muffler for Twin Vacuums (2" PVC x 1" NPT) - Wall Mount	$508

Vacuum Relief Valve

Order No.	Description	List Price
77005027	1/8" MPT Vacuum Relief Valve for use in overhead vacuum piping installations. Order one VRV per evacuation location.	$31

Multi Vacuum Intake/Exhaust Water Valve Kit

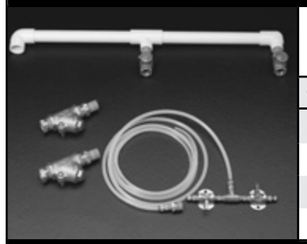

Order No.	Description	List Price
77000034	For two 1 HP Wet-Ring Vacuums	$503
77000950	For two 2 HP Wet-Ring Vacuums	$503
77000982	For three 2 HP Wet-Ring Vacuums	$547
77002003	Check Valve, 3/4"	$36

Waste Water Hook-up Kits

Order No.	Description	List Price
77000121	For 3/4" ID Hose	$135
77000145	For 1" ID Hose	$146

Control Panels

Order No.	Air	Vac	Water	Dimensions (H x W)	List Price	Apollo & Matrx Control Panel Cross Reference	
						Matrx	Apollo
77001584	0	1	0	4.5" x 6.5"	$267	77000291	ASACP0A1V
77001589	0	1	1	4.5" x 6.5"	$303	77000663	ASACP0A1VW
77001587	0	2	0	4.5" x 6.5"	$303	77000661	ASACP0A2V
77001591	0	2	1	4.5" x 6.5"	$389	77000656	ASACP0A2VW
77001594	0	3	1	4.5" x 6.5"	$462	77000664	ASACP0A3VW
77001601	0	3	3	4.5" x 6.5"	$789	77000660	ASACP0A3V3W
77001585	1	0	0	4.5" x 6.5"	$267	77000807	ASACP1A0V
77001586	1	1	0	4.5" x 6.5"	$303	77000292	ASACP1A1V
77001590	1	1	1	4.5" x 6.5"	$389	77000293	ASACP1A1VW
77001592	1	2	0	4.5" x 6.5"	$389	77000643	ASACP1A2V
77001593	1	2	1	4.5" x 6.5"	$462	77000294	ASACP1A2VW
77001595	1	3	0	4.5" x 6.5"	$462	77000665	ASACP1A3V
77001597	1	3	1	4.5" x 6.5"	$583	77000572	ASACP1A3VW
77001596	1	4	0	4.5" x 6.5"	$583	77000571	ASACP1A4V
77001602	1	4	2	4.5" x 8.25"	$910	77000657	ASACP1A4VW
77001588	2	0	0	4.5" x 6.5"	$303	77000662	ASACP2AOV
77001598	2	2	1	4.5" x 6.5"	$583	77000573	ASACP2A2VW
77001600	2	2	2	4.5" x 6.5"	$789	77000659	ASACP2A2V2
77001599	2	3	1	4.5" x 6.5"	$789	77000658	ASACP2A3VW

Water Filter/Bypass Systems

Model	Description	Pipe Size (MPT)	Max. GPM	Dimensions (H x W x D)	Shipping Weight	List Price
77002146*	Water Filter/By-Pass System, Solenoid and Low Voltage Contactor, 3/4" Piping	3/4"	6	19" x 15" x 5.5"	16 lb	$1,275
77002147*	Water Filter/By-Pass System, Solenoid and Low Voltage Contactor, 1" Piping	1"	30	23" x 21" x 7.5"	30 lb	$2,125
77002148	Water Filter/By-Pass System, Solenoid and Low Voltage Contactor, 1 1/4" Piping	1 1/4"	40	23" x 23" x 7.5"	34 lb	$2,610
77002149*	Water Filter/By-Pass System, Solenoid and Low Voltage Contactor, 1 1/2" Piping	1 1/2"	40	25" x 23" x 7.5"	44 lb	$3,460

*Lead Free

BACK TO CONTENTS

Air Compressor and Vacuum Accessories

Low Voltage Control Relays

Order No.	Description	List Price
77000067	Low-Voltage Control Relay for use with 115V equipment up to 1.5HP	$303
77000068	Low-Voltage Control Relay for use with 230V equipment up to 2HP	$303

Voltage Buck & Boost Transformers

Voltage Buck-Boost Transformers will increase or decrease incoming voltage by 10%. This accessory can be used for situations and installations with incoming line voltage too low or high for equipment specifications. Wiring instructions are included with Voltage Buck-Boost Transformers.

Order No.	Description	List Price
77000025	Voltage Buck & Boost Transformer (KVA .25) For P22, CV3 (208/230V), CV3R (208/230V), CV6 (208/230V, 2 required), CV6R (208/230V, 2 required).	$560
77000026	Voltage Buck & Boost Transformer (KVA .50) For P21, P32, P52, G3, G5, G7, G6 (2 required), G10 (2 required), G14 (2 required), P3, P5, P7, P6 (2 required), P10 (2 required), P14 (2 required), CV3 (115V), CV3R (115), CV5, CV5R, CV6 (115V, 2 required), CV6R (115V, 2 required), CV10 (2 required), CV10R (2 required).	$680
77000027	Voltage Buck & Boost Transformer (KVA .75) For P72.	$965

BACK TO CONTENTS

Air Compressor and Vacuum Accessories

StackRack

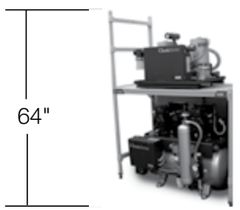

24"W x 48"L x 35"H (shelf level)
33" max clearance under shelf

- Fast, easy to assemble
- Sturdy, able to support weight of dual air compressor when optional channel mounts are used
- Easy to adjust leveling feet to compensate for irregular floor surfaces
- Corrosion and rustproof
- Variable height shelf
- A PowerAir® model P72, PowerVac® or PowerVac® G cannot be mounted on the shelf

Order No.	Description	List Price
77000804	StackRack	$1,565
77000808	Channel Mounts Set of 2 (for mounting compressor on top)	$182

Vacuum & Compressor Lifting Handles

Set of four heavy-gauge steel handles with foam comfort-grip hand-hold pads and attached lock pins.

Order No.	Description	List Price
77001455	Set of Four Handles	$305

Low Voltage Control Pilot Relay

Order No.	Description	List Price
77000361	Low Voltage Control Pilot Relay for use when more than one low voltage device is to be controlled by a single low voltage switch.	$720

BACK TO CONTENTS

PowerMax - Surgical Vacuums

- Specifically designed for oral surgeons
- Vacuum performance
- Easy maintenance for years of reliable service
- 24V Low-voltage control relay for remote operation
- Optional exhaust manifold available for clinics scavenging N_2O
- Includes electrical hook-up kit

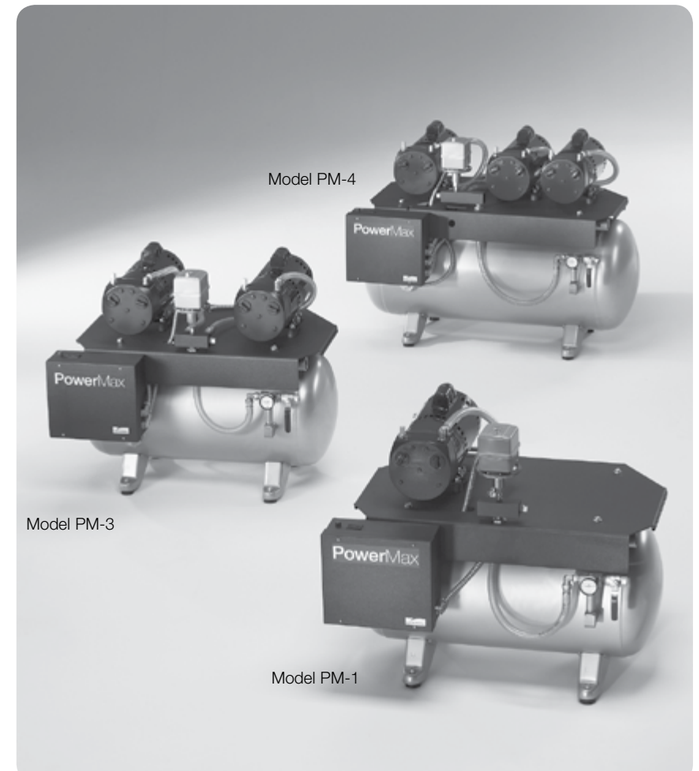

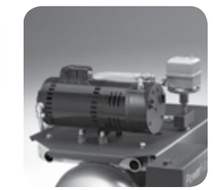

Reliable rotary vane pump requires no lubrication.

Convenient, easy access electrical control box.

Run-time Hour Meter provides for operational and serviceable versatility.

ISO 9001:2000
FM 40049

To calculate dental user capacity:
Please note that the user capacity listed for each model is based on typical combinations of dentists, dental hygienists, dental assistants and handpiece lubrication stations that can work simultaneously in a conventional dental office setting. User satisfaction is a subjective matter. Ratings are shown for planning purposes only. For laboratory applications, contact Midmark Technical Service for proper sizing.

BACK TO CONTENTS

PowerMax - Surgical Vacuums

PowerMax			
Order No.	PM-1	PM-3	PM-4
List Price	$6,335	$9,070	$11,685
Horsepower	1@ 3/4HP	2 @ 3/4HP	3 @ 3/4HP
Size (H x W x D)	31" x 32" x 25"	31" x 32" x 25"	34" x 38" x 27"
Tank Capacity	20 gal	20 gal	35 gal
Normal Capacity	1 user	2-3 users	3-4 users
Electrical	230V @ 5.1 Amp	230V @ 9.7 Amp	230V @ 14.3 Amp
CFM Maximum	8	16	24
Dedicated Circuit Size	20A	20A	20A
Line Frequency	50/60Hz	50/60Hz	50/60Hz
Temperature Range (°F)	40°-104°	40°-104°	40°-104°
Shipping Weight	150 lb	210 lb	354 lb

Note: Control Panels are available on page 126.

PowerMax Accessories

Order No.	Description	List Price
77001413	Hook-Up Kit (includes electrical hook-up box and high-pressure air-line)	$135
77000894	Exhaust Kit for PM-1 and PM-3	$272
77000895	Exhaust Kit for PM-4	$272

Surgical Accessories

Order No.	Description	List Price
77008037	Surgical Operatory Recovery Room Package (Includes all parts listed below)	$1,572
77000825	Surgical Operatory Recovery Room Package (Canadian) (Includes all parts listed below)	$1,572
91120152	(A) Pkg. of Five Disposable Canisters (1200 cc)	$97
77008038	(B) DISS Free Flow Regulator	$1,020
91309169	(C) Matrx by Midmark Outlet Station: Vacuum DISS	$360
91309201	(C) Matrx by Midmark Outlet Station: Vacuum DISS (Canadian)	$360
77000192	(D) Conductive Tubing – 6 ft.	$62

Quick Connect Replacement Accessories

Order No.	Description	List Price
77000690	Quick Connect Free Flow Regulator	$995
91309148	Matrx by Midmark Outlet Station: Vacuum QC	$328

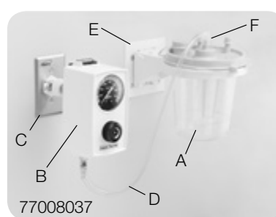

Surgical Operatory Recovery Room Package

Evacuation Filters

Evacuation Filter Assemblies (3/4" FPT)			
	Order No.	Description	List Price
	77000037	Under-counter Mount and Hose Fitting Kit	$310
	77005138	Replacement Bowl	$36
	77000193	Under-counter Mount, Hose Fitting Kit and Surgical Cut-off Valve	$315
	77005138	Replacement Bowl	$36
	77000338	Wall Mount: 2-large/1-small Hose Hanger and Hose Fitting Kit	$520
	77005138	Replacement Bowl	$36
	77000038	Wall Mount: 1-large Hose Hanger, Hose Fitting Kit and Surgical Cut-off Valve	$515
	77005138	Replacement Bowl	$36

Midmark Operatory Cabinetry
Integra™ Dental Casework and Artizan® Expressions

Both Integra™ Dental Casework and Artizan® Expressions provide designs that meet ergonomic workflow, infection control, technology integration and unique storage requirements…offering maximum flexibility to customize cabinetry solutions. Each line has a five year warranty (see page 5 for details) and design support teams to assist you with your projects.

Integra™ Dental Casework

Aligned with LEED Green Building Rating System, Integra Dental Casework's steel frame provides the durable structure and asepsis-friendly designed required for long product life. Its internal and external modularity and flexibility allows for easy modifications and component replacement as office needs evolve.

Feature Highlights:

18 gauge steel frame
Electrostatic, powder-coated baked-on paint
Membrane-pressed, thermofoil-wrapped panels
Seamless polystyrene drawers
Seamless integrated handles

Artizan® Expressions

Bringing a unique, modern look to the dental space, Artizan® Expressions creates an inviting and positive experience for both patients and staff. Customers can combine several cabinet colors, along with resin, upholstery and countertop colors to create a style that is distinctively their own.

Feature Highlights:

3/4" panel wood dowel construction
Seamless, stainless steel bases & accents
Thermally-fused melamine panels with 3mm edgebanding
Soft-close doors and drawers
Brushed nickel handles

Midmark Customer Experience

Integra™ Dental Casework and Artizan® Expressions

Midmark Customer Experience Teammates are available to serve your needs:

Integra™ Dental Casework

Hours: 8 AM – 5 PM Monday through Friday, EST

60 Vista Drive
Versailles, OH 45380
Phone: **1-800-MIDMARK, ext. 88914**
Fax: 1-800-365-2499 / Email: orders-casework@midmark.com

Artizan® Expressions

Hours: 8 AM – 5 PM Monday through Thursday, 8 AM – 4 PM Friday, CST

115 G.L. Comer Road
Glasgow, KY 42141
Phone: **1-800-257-7407, ext. 1210**
Fax: 1-270-651-1732 / Email: orders-glasgowcasework@midmark.com

Please see Ordering Notes on page 4 for all Midmark equipment. Below are Ordering Notes specific to Integra™ and Artizan®:

Ordering Notes

1. ORDERING - Please include the following with your order (minimum order - $35):
   - Quantity
   - Model/Part numbers
   - Description
   - Approximate shipping date required
   - Method of transportation
   - Purchase order number
   - Signature of person placing order
   - Final field measurements
   - Colors
   - Signed copy of drawings
2. SPECIAL DESIGN - Orders for special design, construction, finish or upholstery are not subject to cancellation after your acceptance of our acknowledgement. Special designed products, custom design cabinets and special upholstery WILL NOT be accepted for credit.
3. RETURN OF MERCHANDISE - Integra™ Dental Casework and Artizan® Expressions are manufactured to order and are non-returnable.
4. ORDER CHANGES - Any changes made after the receipt of an order may incur a change fee. This fee will cover materials, labor and handling cost. All changes must be submitted in writing. Upon review and approval of changes, the order will be moved to the next available ship date.
5. DELAYED/RESCHEDULED SHIP DATES - Request to reschedule orders that have not been built will be moved to the next available ship date. Request to reschedule or delay shipment of orders that have been built will incur storage and handling fees until shipped.
6. ORDER CANCELLATION - Cancellation 48 hours from time of order placement is subject to penalty. An assessment will be made at time of cancellation to determine the amount of penalty including material, labor and handling cost. Cancellations must be received in writing. Non-stranded color and custom design orders may not be cancelled without penalty.

Integra™ Dental Casework Contents

Treatment Consoles

Pricing Example 137
FTC4472 Freestanding Treatment Console 138-143
FTC4452 Freestanding Treatment Console 144-148

Center Consoles

Pricing Example 150
FCC10672 Freestanding Center Console 151-155
FCC11272 Freestanding Center Console 156-160
FCC10690 Freestanding Center Console 161-165
FCC11290 Freestanding Center Console 166-170

Side Casework

Pricing Example 172
54"-55" Sink-Storage Unit 173-174
63"-64" Sink-Storage Unit 175-176
Cabinet Modules 177
Countertop & Accessory Pricing (for Cabinet Modules) 178
Cabinet Module Pricing Example 179
OSC018S 18" Sink Unit 180
30"-31" Sink Unit 181
OSC012 12" Waste or Storage Unit 182
OSC015 15" Storage Unit 183
OSC018 18" Storage Unit 184
OSC024 24" Storage Unit 185
OSC036D & OSC042D Side Delivery Units 186
Upper Storage Units 187
OUC19D Glove/Towel/Cup Dispenser 188
OSC010R & OSC010L Round End Accessory 188

Steri-Centers

8' Steri-Center 190-191
10' Steri-Center 192-193
12' Steri-Center 194-195

Dimensions

Treatment Console 268
Central Console 269-270

Integra™ Dental Casework Colors

Below is a listing of the Integra™ Dental Casework standard countertop and panel colors.

Countertops

Standard Corian® Solid Surface Options	Standard Laminate Options	Standard Zodiaq® Quartz Options
Antarctica	Antique Roca	Black Forest
Arrowroot	Brazilian Brown Granite	Borealis Blue
Blue Pebble	Brazilian Topaz	Cappuccino
Blue Spice	Bronzed Fusion	Caraway
Canyon	Butterum Granite	Cloud White
Clove	Colorado Slate	Smokey Topaz
Cottage Lane	Ebony Fusion	Space Black
Earth	Green Tigris	Storm Grey
Granola	Jamocha Granite	Toasted Almond
Hazelnut	Kalahari Topaz	
Jasmine	Mesa Sand	
Lava Rock	Milano Quartz	
Pine	Mystique Marine	
Sandstone	Mystique Mount	
Sonora	Oxide	
Tumbleweed	Smoky Topaz	

Panel Colors

Woodgrains	Midmark Color #	Solids	Midmark Color #
Fusion Maple	413	Pebble Grey	216
Golden Anigre	414	Harmony White	422
Honey Maple	415	Shimmer	423
Wild Cherry	417	Bark	424
Violin Figured Annigre	418	Shark Grey	425
Summer Apple	419		
Crossfire Java	420		
Dark Walnut	421		

Standard colors subject to change. An upcharge will apply to any non-standard color.

Integra™ Freestanding Treatment Console

Pricing Example

Part #	Description	Price
FTC4472	Integra™ Freestanding Treatment Console	$6,305
	Base Back Panel Option: Freestanding (30900-00676)	N/C

Base Zone

B1 – Base Storage		
	Front Storage:	
	2", equip. shelf, 8" drawer (B1-003)	$484
B2 – Base Delivery		
	Work surface door, left hinge (30300-01746)	N/C
B3 – Base Storage		
	Side Storage (30300-01753):	
	(1) Swing-out shelf (30900-00857)	$197
	(1) Swing-out tub (30900-00859)	197

Middle Zone

M1 – Midsection		
	Corian® storage shelf w/ 5" accessory panel (30900-00688)	N/C
T1 – Task Light		
	Full panel task light & clock timer (30900-00698)	$507

Upper Zone

U1 – Upper Front Zone		
	Window doors (31600-01058)	$169
	Upper storage: (6) shelves @ $30 each (30500-00353)	180
U2 – Upper Back Zone		
	Back panel (30900-00660)	N/C

Countertop Selection

	Standard Midmark Corian®	Included

Panel Color

	Shimmer	Included

Instrument Delivery System

153659-004	Pivoting work surface and assistant's instruments	$3,089

TOTAL $11,128

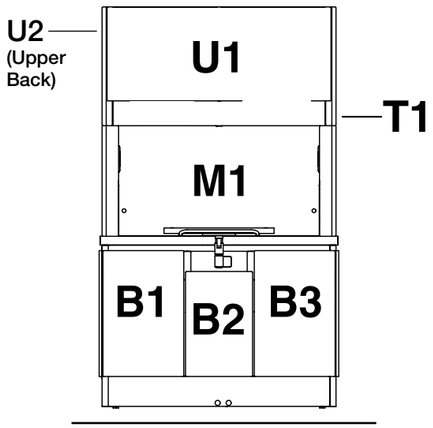

FTC4472

Dimensions on page 268.

Starting Price: $6,305

Starting price includes the following:

B1 – Base Storage
- Full height door for front storage or bi-fold door for side storage

B2 – Base Door Delivery
- Choice of full height door or work surface door

B3 – Base Storage
- Full height door for front storage or bi-fold door for side storage

M1 – Mid-section
- Storage shelf & accessory panel

T1 – Task Light
- Open

U1 – Upper Front
- Solid front doors

U2 – Upper Back
- Back panel – no pass through

Countertop, shelf and work surface: choice of solid surface from the Midmark Corian® Guide.

ZONE OPTIONS

Base Back Panel Options

Freestanding **N/C**
Full Back Panel 30900-00676
Full Lead Back Panel 30900-00678

Wall-mount **N/C**
Open Back with Side Trim Panels
30900-00677

B2 - Base Door Delivery Door Choice

Full Height Door (FHD) **N/C**
___Left Hinge 30300-01748
___Right Hinge 30300-01747
___Left Hinge CPU Vent 30300-01758
___Right Hinge CPU Vent 30300-01757

Work Surface Door (WSD) **N/C**
___Left Hinge 30300-01746
___Right Hinge 30300-01745
___Left Hinge CPU Vent 30300-01762
___Right Hinge CPU Vent 30300-01761
Note: Standard right hinge with Procenter Delivery

Interior Options

Adjustable Shelves **$30 Each**
30500-00257
3 Max. w/ FHD
2 Max. w/WSD
Note: Not Available w/ Procenter Delivery

Nitrous Mount Panel **$72**
30900-00683

4 Port USB Hub **$117**
30900-00694

CPU Fan **$169**
30900-00801

*Procenter Mount Panel **N/C**
FTC-B2-601 LH (Standard)
Note: Control Tray on LH with RH door
FTC-B2-600 RH (Must Specify)
Note: Control Tray on RH with LH door

*Required for mounting Procenter into FTC

BACK TO CONTENTS

Integra™ Freestanding Treatment Console FTC4472

ZONE OPTIONS

B1 & B3 - Base Storage

Side Storage
Bi-Fold Door N/C
[B1] 30300-01754
[B3] 30300-01753

Adjustable Shelf **$30 each**
30500-00351

Pull-out Shelf **$123 each**
30500-00352

Swing-out Shelf **$197 each**
[B1] 30900-00856
[B3] 30900-00857

Swing-out Tub **$197 each**
[B1] 30900-00858
[B3] 30900-00859

Note: Maximum of three items per storage zone.

Front Storage

B1-001
B3-001
(2) 2", 4", 8" Drawers
$484

B1-002
B3-002
(2) 2", (3) 4" Drawers
$484

B1-003
B3-003
2", Equip. Shelf, 8" Drawer
$484

B1-004
B3-004
2", Equip. Shelf, (2) 4" Drawers
$484

B1-005
B3-005
2", 4", Right Hand Door
$242

B1-006
B3-006
2", 4", Left Hand Door
$242

Front Storage • Door Interior Options

Adjustable Shelf **$30 each**
30500-00256

4" Pull-out Tub **$102 each**
30400-00206

8" Pull-out Tub **$102 each**
30400-00127

Pull-out Shelf **$123 each**
30500-00350

CPU Fan **$169**
30900-00801

Front Storage • Drawer Options

Accessory Panel
N/C in lieu of 4" Drawer
30900-00687

Glove/Tissue Dispenser
N/C in lieu of 4" Drawer
30900-00686

Writing Surface
N/C in lieu of 2" Drawer
30900-00654

Note: All above options must be in top position

BACK TO CONTENTS

ZONE OPTIONS

M1 - Mid-section

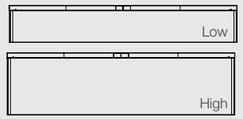

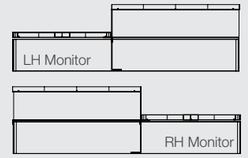

Open Mid-section
Deduction **-$200**
No Storage Shelf
No Accessory Panel
30900-00806

Storage Shelf - Includes
Accessory Panel **N/C**
Low (with 5" Acc. Panel)
30900-00688
High (with 9" Acc. Panel)
30900-00689

Accessory Panel Cut-out **$72**
5" Panel 31600-01053
9" Panel 31600-01063
Note: Specify Manufacturer, Product Location: Left, Right or Center.

Split Monitor Shelf - Includes
Full Accessory Panel **$169**
RH Monitor 30900-00655
LH Monitor 30900-00656
Note: Specify Monitor Left or Right.

T1 - Task Light

Half Panel
___Task Light Only **$327**
30900-00699

___Clock Timer Only **$367**
30900-00696

___Task Light & Clock Timer **$507**
30900-00700

Full Panel
___Task Light Only **$327**
30900-00679

___Clock Timer Only **$367**
30900-00696

___Task Light & Clock Timer **$507**
30900-00698

Open – No Panel/ No Task Light **N/C**
30900-00682

Full Panel – No Task Light **$112**
30900-00697

Note: Specify half panel left or right. Half panel task lights should be used in conjunction with split monitor shelf, with task light on the other side as the monitor.

Sliding Track Monitor Mount
30900-00838 (ordered with 12:00 cabinet) **$929**

Harness Cover **N/C**
30900-00839
Note: Only needed if no task light

Field Install Kit **$929**
002-1410-00
Note: Only for FTC4472 built 10/24/10 or after

CABLES & EXORVISION MONITOR SOLD SEPARATELY

High Voltage Harness **$164**
002-1411-01

Low Voltage Harness (for Exorvision) **$218**
002-1411-00

17" Exorvision Monitor **$1,827**
002-1125-00

Note: Sliding track monitor mount can not be used with half valence panel. Please order with full valence panel.

Integra™ Freestanding Treatment Console FTC4472

U1 - Upper Storage

Door Options

Front Doors	Front Doors
Solid **N/C**	Window **$169**
31600-01057	31600-01058

Upper Storage Options
Adjustable Shelves **$30 each**
30500-00353

Four shelf maximum per section

U2 - Upper Back

Door Options

Back Panel	Back Doors	Back Doors
No Pass Through **N/C**	Solid **$142**	Window **$310**
Std: 30900-00660	Std: 31600-01059	Std: 31600-01061
Lead: 30900-00681	Lead: 31600-01060	

Other Upper Options

12" Top Extension **$254**
31300-00563

Note: These parts and pricing are for ordering a complete FTC4472. If reconfiguration is requested or parts are needed, please contact Customer Experience for service part numbers and pricing.

ZONE OPTIONS

Procenter Freestanding Treatment Console (FTC) Mounted

Rear Delivery with Quick Left/Right Conversion of Dentist and Assistant's Instruments (Designed for use with the Midmark Freestanding Treatment Console.)

Standard Features

- Assistant's Instruments: Single HVE, Saliva Ejector and Syringe
- Air and Water Quick Connects
- 21" W x 19" D Corian Work Surface

Units for use on the Artizan® 80, 85 and 90 series, all Integra™ cabinets:

Part #	Description	Price
153659-003	Pivoting Work Surface Only	$1,608
153659-004	Pivoting Work Surface and Assistant's Instruments	3,089
153659-002	Pivoting Work Surface, Assistant's Instruments and Procenter Delivery System	5,782

Units for use on the Artizan® 70 and 75 series cabinets:

Part #	Description	Price
153659-008	Assistant's Instruments and Procenter Delivery System for Slide-out Work Surface*	$5,086
153659-009	Assistant's Instruments for Slide-out Work Surface*	2,379

** Work Surface included with cabinets*

Options (Additional options listed on pages 84-91):

153607	Add or Delete Handpiece Position	+/- 400
029-2808-00	Second Syringe (Procenter Delivery Unit)	170
153630-004	Handpiece Illumination System	514
029-2853-01	Tubing and Lamp for Fiber Optic Handpiece	290
029-2853-00	Tubing for ISO-C Fiber Optic Handpiece	225
002-1256-00	Slide for pivoting work surface (Required if installed in cabinet other than FTC/Artizan® Cabinets)	41
LAMDED	Laminate Work Surface Deduction for pivoting work surface	(-350)
QUPGRADE	Zodiaq® Work Surface Upgrade for pivoting work surface	211
153668-002	Chair Control, Dentist's Instruments, Ultra Chair	308
153668-003	Chair Control, Assistant's Instruments, Ultra Chair	308
153668-004	Chair Control, Dentist's Instruments, Elevance Chair	308
153668-005	Chair Control, Assistant's Instruments, Elevance Chair	308
029-2809-00	Heated Dentist's Syringe*	321
152956-01	Second HVE for Assistant's Instruments	132
002-1173-00	Swivel Tray Support and Clamp for pivoting work surface	267
002-1184-00	Swivel Tub Support and Clamp for pivoting work surface	267

** (Requires Power Supply)*

Integra™ Freestanding Treatment Console FTC4472 ORDER FORM

Copy-Complete-Send

Starting Price $6,305
☐ FTC4472

Base Back Panel Options
☐ Freestanding ☐ Wall-mount N/C

B1-Base Storage
☐ Side Storage
Internal Storage Options:
_____ $ _____
☐ Front Storage
Door Hinge ☐Left ☐Right
Options:
Config: _____ $ _____
Interior: _____ $ _____
Other: _____ $ _____

B2-Base Delivery
☐ Full height door N/C
Door Hinge: ☐ Left ☐ Right ☐ Left CPU ☐ Right CPU
☐ Work surface door N/C
Door Hinge: ☐ Left ☐ Right ☐ Left CPU ☐ Right CPU
Mount Panels: ☐ Procenter ☐ Nitrous $_____
Other Options: _____ $_____

B3-Base Storage
☐ Side Storage N/C
Internal Storage Options:
_____ $ _____
☐ Front Storage
Door Hinge ☐ Left ☐ Right
Options:
Config: _____ $ _____
Interior: _____ $ _____
Other: _____ $ _____

M1 Mid-section
☐ Open Mid-section -$200
☐ Storage Shelf N/C
Accessory Panel under storage shelf
Specify height: ☐ 5" H ☐ 9" H
☐ Split monitor shelf w/ full accessory panel $ _____
Specify monitor location: ☐ Left ☐ Right
☐ Accessory panel cut-out $ _____
Specify position: ☐ Left ☐ Right ☐ Center

T1 Task Light
Panel: _____ $ _____
☐ Sliding Track Monitor Mount $ _____
☐ Harness Cover N/C
☐ Field Install Kit $ _____
☐ Cables (Sold SEPARATELY)
Specify: ☐ Low ☐ High $ _____
☐ Exorvision Monitor (Sold Separately) $ _____

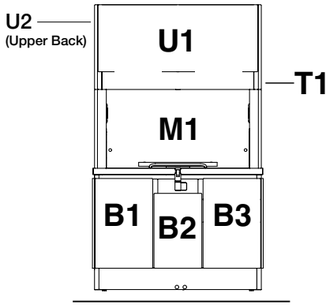

FTC4472

U1 - Upper Front
Door Options: ☐ Solid ☐ Window $ _____
Storage Options: _____ $ _____

U2 - Upper Back
Door Options: ☐ Back Panel ☐ Solid ☐ Window $ _____

Additional Options	Price
☐ Lead Lining FTC-LEAD (Requires extended lead time)	(Call for Pricing)
☐12" Top Extension	$254

Countertops (Standard Colors)
☐ Laminate deduction (31100-01082) -$750
Color: _____
☐ Corian® N/C
Color: _____
☐ Zodiaq® Upcharge (31100-01084) $620
Color: _____
Special Color Upgrade (FTC-SPEC COLOR)
☐ Laminate ☐ Corian® ☐ Zodiaq®
Color: _____ $310

Instrument Delivery System
☐ Work Surface Only 153659-003 $1,608
☐ Assistant's Inst. & Work Surface 153659-004 $3,089
☐ Procenter Delivery, Assistant's Inst. & Work Surface 153659-002 $5,782
Options:
_____ $ _____
_____ $ _____

Cabinet Panel Color
☐ Bark ☐ Harmony White ☐ Summer Apple
☐ Crossfire Java ☐ Honey Maple ☐ Violin Figured Annigre
☐ Dark Walnut ☐ Pebble Grey
☐ Fusion Maple ☐ Shark Grey ☐ Wild Cherry
☐ Golden Anigre ☐ Shimmer

Total Price $ _____

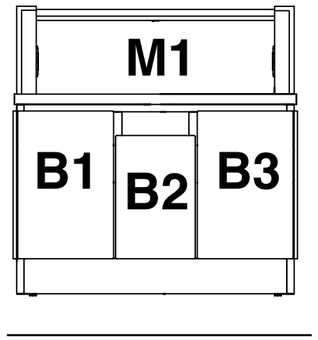

FTC4452

Dimensions on page 268.

Starting Price: $5,865

Starting price includes the following:

B1 – Base Storage
- Full height door for front storage or bi-fold door for side storage

B2 – Base Door Delivery
- Choice of full height door or work surface door

B3 – Base Storage
- Full height door for front storage or bi-fold door for side storage

M1 – Mid-section
- Storage shelf and accessory panel

Countertop, shelf and work surface: choice of solid surface from the Midmark Corian® Guide.

ZONE OPTIONS

Base Back Panel Options

Freestanding **N/C**
Full Back Panel 30900-00676

Wall-mount **N/C**
Open Back with Side Trim Panels
30900-00677

B2 - Base Door Delivery Door Choice

Full Height Door (FHD) **N/C**
___Left Hinge 30300-01748
___Right Hinge 30300-01747
___Left Hinge CPU Vent 30300-01758
___Right Hinge CPU Vent 30300-01757

Work Surface Door (WSD) **N/C**
___Left Hinge 30300-01746
___Right Hinge 30300-01745
___Left Hinge CPU Vent 30300-01762
___Right Hinge CPU Vent 30300-01761
Note: Standard right hinge with Procenter Delivery

Interior Options

Adjustable Shelves **$30 Each**
30500-002573 Max. w/ FHD
2 Max. w/WSD
Note: Not Available
w/ Procenter Delivery

Nitrous Mount Panel **$72**
30900-00683

4 Port USB Hub **$117**
30900-00694

CPU Fan **$169**
30900-00801

*Procenter Mount Panel **N/C**
FTC-B2-601 LH (Standard)
Note: Control Tray on LH with RH door
FTC-B2-600 RH (Must Specify)
Note: Control Tray on RH with LH door

**Required for mounting Procenter into FTC*

BACK TO CONTENTS

Integra™ Freestanding Treatment Console FTC4452

ZONE OPTIONS

B1 & B3 - Base Storage

Side Storage
Bi-Fold Door N/C
[B1] 30300-01754
[B3] 30300-01753

Adjustable Shelf **$30 each**
30500-00351

Pull-out Shelf **$123 each**
30500-00352

Swing-out Shelf **$197 each**
[B1] 30900-00856
[B3] 30900-00857

Swing-out Tub **$197 each**
[B1] 30900-00858
[B3] 30900-00859

Note: Maximum of three items per storage zone.

Front Storage

B1-001
B3-001
(2) 2", 4", 8" Drawers
$484

B1-002
B3-002
(2) 2", (3) 4" Drawers
$484

B1-003
B3-003
2", Equip. Shelf,
8" Drawer
$484

B1-004
B3-004
2", Equip. Shelf,
(2) 4" Drawers
$484

B1-005
B3-005
2", 4", Right
Hand Door
$242

B1-006
B3-006
2", 4", Left
Hand Door
$242

Front Storage • Door Interior Options

Adjustable Shelf **$30 each**
30500-00256

4" Pull-out Tub **$102 each**
30400-00206

8" Pull-out Tub **$102 each**
30400-00127

Pull-out Shelf **$123 each**
30500-00350

CPU Fan **$169**
30900-00801

Front Storage • Drawer Options

Accessory Panel
N/C in lieu of
4" Drawer
30900-00687

Glove/Tissue
Dispenser
N/C in lieu of
4" Drawer
30900-00686

Writing Surface
N/C in lieu of
2" Drawer
30900-00654

Note: All above options must be in top position

BACK TO CONTENTS

ZONE OPTIONS

M1 - Mid-section

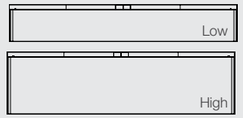

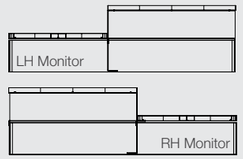

Open Mid-section
Deduction **-$200**
No Storage Shelf
No Accessory Panel
30900-00806

Storage Shelf - Includes
Accessory Panel **N/C**
Low (with 5" Acc. Panel)
30900-00688
High (with 9" Acc. Panel)
30900-00689

Accessory Panel Cut-out **$72**
5" Panel 31600-01053
9" Panel 31600-01063
Note: Specify Manufacturer,
Product Location: Left,
Right or Center.

Split Monitor Shelf - Includes
Full Accessory Panel **$169**
RH Monitor 30900-00655
LH Monitor 30900-00656
Note: Specify Monitor Left
or Right.

Note: These part numbers and pricing are for ordering a complete FTC4452. If reconfiguration is requested or parts are needed, please contact Customer Experience for service part numbers and pricing.

BACK TO CONTENTS

Integra™ Freestanding Treatment Console FTC4452

ZONE OPTIONS

Procenter Freestanding Treatment Console (FTC) Mounted

Rear Delivery with Quick Left/Right Conversion of Dentist and Assistant's Instruments (Designed for use with the Midmark Freestanding Treatment Console.)

Standard Features

- Assistant's Instruments:
  Single HVE, Saliva Ejector and Syringe
- Air and Water Quick Connects
- 21" W x 19" D Corian Work Surface

Units for use on the Artizan® 80, 85 and 90 series, all Integra™ cabinets:

Part #	Description	Price
153659-003	Pivoting Work Surface Only	$1,608
153659-004	Pivoting Work Surface and Assistant's Instruments	3,089
153659-002	Pivoting Work Surface, Assistant's Instruments and Procenter Delivery System	5,782

Units for use on the Artizan® 70 and 75 series cabinets:

Part #	Description	Price
153659-008	Assistant's Instruments and Procenter Delivery System for Slide-out Work Surface*	$5,086
153659-009	Assistant's Instruments for Slide-out Work Surface*	2,379

** Work Surface included with cabinets*

Options (Additional options listed on pages 84-91):

153607	Add or Delete Handpiece Position	+/- 400
029-2808-00	Second Syringe (Procenter Delivery Unit)	170
153630-004	Handpiece Illumination System	514
029-2853-01	Tubing and Lamp for Fiber Optic Handpiece	290
029-2853-00	Tubing for ISO-C Fiber Optic Handpiece	225
002-1256-00	Slide for pivoting work surface (Required if installed in cabinet other than FTC/Artizan® Cabinets)	41
LAMDED	Laminate Work Surface Deduction for pivoting work surface	(-350)
QUPGRADE	Zodiaq® Work Surface Upgrade for pivoting work surface	211
153668-002	Chair Control, Dentist's Instruments, Ultra Chair	308
153668-003	Chair Control, Assistant's Instruments, Ultra Chair	308
153668-004	Chair Control, Dentist's Instruments, Elevance Chair	308
153668-005	Chair Control, Assistant's Instruments, Elevance Chair	308
029-2809-00	Heated Dentist's Syringe*	321
152956-01	Second HVE for Assistant's Instruments	132
002-1173-00	Swivel Tray Support and Clamp for pivoting work surface	267
002-1184-00	Swivel Tub Support and Clamp for pivoting work surface	267

** (Requires Power Supply)*

BACK TO CONTENTS

Integra™ Freestanding Treatment Console FTC4452 ORDER FORM

Copy-Complete-Send

Starting Price $5,865
☐ **FTC4452**

Base Back Panel Options
☐ Freestanding ☐ Wall-mount N/C

B1-Base Storage
☐ Side Storage
Internal Storage Options:
_____ $ _____
☐ Front Storage
Door Hinge ☐ Left ☐ Right
Options:
Config: _____ $ _____
Interior: _____ $ _____
Other: _____ $ _____

B2-Base Delivery
☐ Full height door N/C
Door Hinge: ☐ Left ☐ Right ☐ Left CPU ☐ Right CPU
☐ Work surface door
Door Hinge: ☐ Left ☐ Right ☐ Left CPU ☐ Right CPU
Mount Panels: ☐ Procenter ☐ Nitrous $_____
Other Options: _____ $_____

B3-Base Storage
☐ Side Storage N/C
Internal Storage Options:
_____ $ _____
☐ Front Storage
Door Hinge ☐ Left ☐ Right
Options:
Config: _____ $ _____
Interior: _____ $ _____
Other: _____ $ _____

M1 Mid-section
☐ Open Mid-section -$200
☐ Storage Shelf N/C
Accessory Panel under storage shelf
Specify height: ☐ 5" H ☐ 9" H
☐ Split monitor shelf w/ full accessory panel $ _____
Specify monitor location: ☐ Left ☐ Right
☐ Accessory panel cut-out $ _____
Specify position: ☐ Left ☐ Right ☐ Center

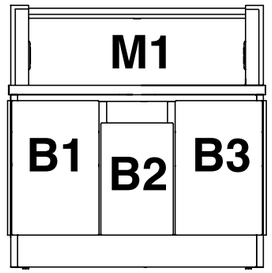

FTC4452

Countertops (Standard Colors)
☐ Laminate deduction (31100-01082) -$750
Color: _____
☐ Corian® N/C
Color: _____
☐ Zodiaq® Upcharge (31100-01084) $620
Color: _____
Special Color Upgrade (FTC-SPEC COLOR)
☐ Laminate ☐ Corian® ☐ Zodiaq®
Color: _____ $310

Instrument Delivery System
☐ Work Surface Only $1,608
153659-003
☐ Assistant's Inst. & Work Surface $3,089
153659-004
☐ Procenter Delivery, Assistant's Inst. & Work Surface $5,782
153659-002
Options:
_____ $ _____
_____ $ _____

Cabinet Panel Color
☐ Bark ☐ Harmony White ☐ Summer Apple
☐ Crossfire Java ☐ Honey Maple ☐ Violin Figured Annigre
☐ Dark Walnut ☐ Pebble Grey
☐ Fusion Maple ☐ Shark Grey ☐ Wild Cherry
☐ Golden Anigre ☐ Shimmer

Total Price $ _____

Integra™ Freestanding Center Console

Pricing Example

Part #	Description	Price
FCC11290	Integra™ Freestanding Treatment Console	$15,199

Sink Base

Tapmaster® Foot Activated Faucet	Included
Configuration: SB-001	484

Dispenser Unit

Glove Dispensers	
Right hinge door: two (30300-01779)	147
Side: two per side (A Side 30900-00725, B Side 30900-00726)	293
Metal Shelves	
One included at no charge (30500-00264)	Included

Mid-Section

Privacy Panel	
Centered (30900-00711)	Included
Fixed Mid-Shelf	
Corian® half shelves (A Side 30500-00361, B Side 30500-00362)	438

Upper Unit

Window Doors	
Two per side (31600-01068)	286
Metal Shelves	
Three at $30 each (30500-00376)	90

Equipment Base

Triple Storage	
Module 1 Configuration: Solid Doors (EB-15-001)	Included
Module 2 Configuration: Solid Doors (EB-15-001)	Included
Module 3 Configuration: CPU Doors (31600-01071)	Included

Equipment Upper

Bi-fold Doors (30300-01806)	1,408

Countertops

Standard Midmark Corian®	Included
Stainless steel sink, faucet and soap dispenser	Included

Cabinet Panel Color

Crossfire Java	Included

Total $18,345

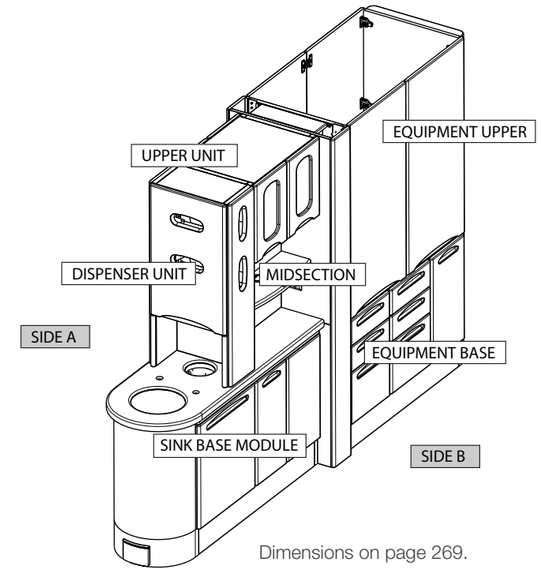

Dimensions on page 269.

Starting Price: $13,397

Starting price includes the following:

Sink Base Module
- White Corian® integrated sink, white faucet and soap dispenser (stainless steel option available at no charge)

Dispenser Unit
- Left or right hinge front door

Midsection
- Privacy Panel

Upper Unit
- Solid Doors

Equipment Base
- Solid Doors or CPU Doors, laminate top

Equipment Upper
- Includes X-ray mount, choice of partial or full privacy panel

Countertop and fixed mid-shelf: choice of solid surface from the Midmark Corian® Guide.

Side Designation – standing at the sink, facing the Dispenser Unit, Side A is to the left and Side B is to the right.

ZONE OPTIONS

Sink Base

Tapmaster® Foot Activated Faucet
Deduction **-$330** FCC-NO TAP

Storage Options
Select from Sink Base Storage Configuration Section

Countertop Options
Laminate Deduction **-$800**
31100-01085
Corian® - Solid Surface Sink, White Faucet & Soap Dispenser **N/C**
31100-01086

Corian® - Undermount Stainless Steel Sink, Faucet & Soap Dispenser **N/C**
31100-01087
Zodiaq® - Undermount Stainless Steel Sink, Faucet & Soap Dispenser **$878**
31100-01088

Dispenser Unit

Glove Dispensers
___ Door (One **$72**)
Rt. Hinge 30300-01775
Lt. Hinge 30300-01776

___ Door (Two **$147**)
Rt. Hinge 30300-01773
Lt. Hinge 30300-01774

___ Side (One per each side **$146**)
Side A 30900-00721 **$73**
Side B 30900-00722 **$73**

___ Side (Two per each side **$292**)
Side A 30900-00719 **$146**
Side B 30900-00720 **$146**

Metal Shelves **$30 each**
30500-00264
Note: Two maximum – can only be used in place of side glove dispensers.

Midsection

Privacy Panel N/C
___ Center
30900-00711
___ A Side
30900-00712
___ B Side
30900-00713

Laminate Mid-shelf
Full Shelf **$169**
[A Side] 30500-00355
[B Side] 30500-00356
Half Shelf **$107 each**
[A Side] 30500-00357
[B Side] 30500-00358

Zodiaq® Mid-shelf
Full Shelf **$406**
[A Side] 30500-00363
[B Side] 30500-00364
Half Shelf **$254 each**
[A Side] 30500-00365
[B Side] 30500-00366

Corian® Mid-shelf
Full Shelf **$337**
[A Side] 30500-00359
[B Side] 30500-00360
Half Shelf **$219 each**
[A Side] 30500-00361
[B Side] 30500-00362

ZONE OPTIONS

Upper Unit

Task Light
___ A Side Only **$169**
30900-00715
___ B Side Only **$169**
30900-00716
___ Two (Requires centered privacy panel) **$338**
[A Side] 30900-00717
[B Side] 30900-00718

Window Doors **$286**
4 Total (2 per side)
31600-01065

Adjustable Metal Shelves **$30 Each**
30500-00376

Equipment Base

Open Delivery with Privacy Panel **N/C**
Delivery open to:
___ A Side
30800-00121
___ B Side
30800-00122

Laminate Countertop **N/C**
31100-01091
Corian Upcharge **$1,002**
31100-01093
Zodiaq® Upcharge **$1,311**
31100-01095
Grey Laminate Top **N/C**
31100-01089

Triple Storage
- Select storage module 1 & 2 from storage configuration section
Module 1 (closest to sink base)
Module 2 (center module)
- Select storage module 3 as full door or CPU door **N/C**
Module 3 (end of cabinet)
Full door 31600-01070
CPU door 31600-01071

Equipment Upper

X-ray Privacy Panel **N/C**
___ A Side
30900-00791
___ B Side
30900-00792
___ Center
30900-00751

X-ray Mount **N/C**
-Specify Model

Full Privacy Panel **N/C**
___ A Side
30900-00787
___ B Side
30900-00788
___ Center
30900-00749

Bi-fold Doors **$1,239**
30300-01803

Bi-fold Door Interior Options
X-ray Mount **N/C**
-Specify Model

Door Interlock **$242**
30900-00338

Pass-through Storage **$362**
30900-00743
With Adjustable Shelves **$57 Each**
30500-00372

Split Storage (Shown at left) **$676**
30900-00745
With Adjustable Shelves **$30 Each**
30500-00275

Integra™ Freestanding Center Console
FCC10672 (106" L, 42" EB, 72" H)

SINK BASE CONFIGURATIONS

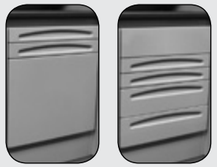

SB-001 **$484**
[A Side] (2) 2" Drawers, FF
[B Side] FF, (2) 2", (2) 4" Drawers
SB-007 **$484**
[A Side] FF,522) 2", (2) 4" Drawers
[B Side] (2) 2" Drawers, FF

SB-002 **$484**
[A Side] (2) 2" Drawers, FF
[B Side] FF, (3) 4" Drawers
SB-008 **$484**
[A Side] FF, (3) 4" Drawers
[B Side] (2) 2" Drawers, FF

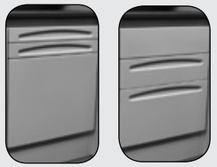

SB-003 **$484**
[A Side] (2) 2" Drawers, FF
[B Side] FF, (1) 4", (1) 8" Drawers
SB-009 **$484**
[A Side] FF, (1) 4", (1) 8" Drawers
[B Side] (2) 2" Drawers, FF

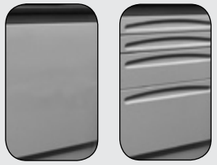

SB-004 **$484**
[A Side] FF
[B Side] (2) 2", (1) 4", (1) 8" Drawers
SB-010 **$484**
[A Side] (2) 2", (1) 4", (1) 8" Drawers
[B Side] FF

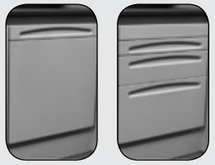

SB-005 **$484**
[A Side] (1) 2" Drawer, FF
[B Side] FF, (1) 2", (1) 4", (1) 8" Drawers
SB-011 **$484**
[A Side] FF, (1) 2", (1) 4", (1) 8" Drawers
[B Side] (1) 2" Drawer, FF

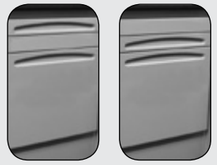

SB-006 **$242**
[A Side] (1) 2" Drawer, FF, Door
[B Side] FF, (1) 2" Drawer, Door
SB-012 **$242**
[A Side] FF, (1) 2" Drawer, Door
[B Side] (1) 2" Drawer, FF, Door

Sink Base Storage - Interior Door Options

Adjustable Metal Shelf **$30 each**
30500-00261

Pull-out Shelf **$123 each**
30500-00354

CPU Fan **$169**
30900-00801

Swing-out Shelf **$197 each**
_____ Left Hand 30900-00857
_____ Right Hand 30900-00856

Swing-out Tub **$197 each**
_____ Left Hand 30900-00859
_____ Right Hand 30900-00858

Integra™ Freestanding Center Console
FCC10672 (106" L, 42" EB, 72" H)

EQUIPMENT BASE CONFIGURATION

Module 1 & 2 Only

EB-15-001 **N/C**
[A Side] Solid Door
[B Side] Solid Door

EB-15-002 **N/C**
[A Side] CPU Door
[B Side] CPU Door

EB-15-003 **$484**
[A Side] FF, (2) 4" Drawers
[B Side] (2) 4" Drawers, FF
EB-15-007 **$484**
[A Side] (2) 4" Drawers, FF
[B Side] FF, (2) 4" Drawers

EB-15-004 **$484**
[A Side] FF, (1) 8" Drawer
[B Side] (1) 8" Drawer, FF
EB-15-008 **$484**
[A Side] (1) 8" Drawer, FF
[B Side] FF, (1) 8" Drawer

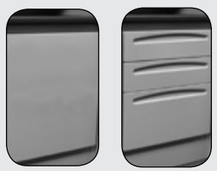

EB-15-005 **$484**
[A Side] FF
[B Side] (2) 4", (1) 8" Drawers
EB-15-009 **$484**
[A Side] (2) 4", (1) 8" Drawers
[B Side] FF

EB-15-006 **$242**
[A Side] FF, Door
[B Side] (1) 4" Drawer, Door
EB-15-010 **$242**
[A Side] (1) 4" Drawer, Door
[B Side] FF, Door

Equipment Base Storage - Interior Door Options

Adjustable Metal Shelf **$30 Each**
[Module 1 & 2] 30500-00370
[Module 3] 30500-00383

Pull-out Shelf **$123 Each**
30500-00374
Note: Only available in Module 1 & 2

CPU Fan **$169**
30900-00801

Note: These part numbers and pricing are for ordering a complete FCC10672. If reconfiguration is requested or parts are needed, please contact Customer Experience for service part number and pricing.

BACK TO CONTENTS

Integra™ Freestanding Center Console
FCC10672 (106" L, 42" EB, 72" H) ORDER FORM

Copy-Complete-Send

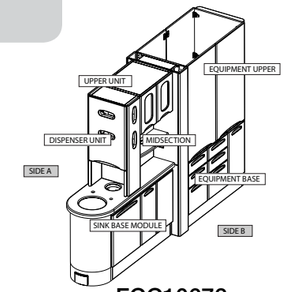

FCC10672

Starting Price $13,397
☐ **FCC10672**

Sink Base Module
☐ Delete Tapmaster® (-$330) $ _____
Storage Module
Config: _____ $ _____
Interior: _____ $ _____

Dispenser Unit
Glove Dispenser
Door ☐ One ($72) ☐ Two ($147) $ _____
Door Hinges ☐ Left ☐ Right
Side ☐ One/side ($146) ☐ Two/side ($293) _____
Metal Shelves (2 max. $30 each) Qty: _____ _____

Midsection
Privacy Panel
☐ Center ☐ A Side ☐ B Side N/C
Fixed Mid-shelf: $ _____
☐ Laminate ($169 Full, $107/Half))
☐ Corian® Solid Surface ($338 Full, $219/Half)
☐ Zodiaq® Quartz ($406 Full, $254/Half)

Equipment Base
Open Delivery & Privacy Panel N/C
Delivery open to: ☐ A Side ☐ B Side
Triple Storage
Module 1 Config: _____ $ _____
Door Storage Options: _____ _____
Module 2 Config: _____ _____
Door Storage Options: _____ _____
Module 3 ☐ Door ☐ CPU Door N/C
Door Storage Options: _____ _____

Upper Unit
Task Light
One ($169) - Specify ☐ A Side ☐ B Side $_____
Two ($337)
Window Doors - 2 per side ($286) _____
Metal Shelves ($30 each) Qty: _____ _____

Equipment Upper
☐ X-ray Mount Panel N/C
Specify Model:
☐ Partial Panel ☐ X-ray ☐ Full N/C
Specify: ☐ Center ☐ A Side ☐ B Side
☐ Bi-fold Doors ($1,239) $_____
Interior Options:
☐ Door Inter-lock ($242) _____
☐ Pass-through Storage ($362) _____
☐ Pass-through Storage Shelves ($57 each)
Qty: _____ _____
☐ Split Storage ($676) _____
☐ Split Storage Shelves ($30 each)
Qty: _____ _____
☐ Lead Lining FCC-LEAD-72 (Call for Pricing)
* Requires extended lead time

Countertops
Standard Laminate Deduction (-$800) Specify Color:_____ $_____
Standard Corian® Solid Surface Specify Color: _____ N/C
Includes Solid Surface Sink, White Faucet & Soap Dispenser N/C
Optional Stainless Steel Undermount Sink with Matching Faucet & Soap Dispenser N/C
Bi-fold Doors (Corian® Sink Side Only, Grey Laminate Equip. End-Included) N/C
No Bi-fold Doors (Corian® both Sink & Equip. End $1,002) _____
Standard Zodiaq® Quartz Specify Color:_____ _____
Includes Stainless Steel Sink with Matching Faucet & Soap Dispenser
Bi-fold Doors (Zodiaq® Sink Side Only, Grey Laminate Equip. End $878) _____
No Bi-fold Doors (Zodiaq® both Sink & Equipment End $2,190) _____
Special Color Upgrade (FCC-SPEC COLOR $394) Specify Color:_____ _____

Cabinet Panel Color
☐ Bark ☐ Harmony White ☐ Summer Apple
☐ Crossfire Java ☐ Honey Maple ☐ Violin Figured Annigre
☐ Dark Walnut ☐ Pebble Grey
☐ Fusion Maple ☐ Shark Grey ☐ Wild Cherry
☐ Golden Anigre ☐ Shimmer

Total Cabinet Price $_____

BACK TO CONTENTS

Integra™ Freestanding Center Console
FCC11272 (112" L, 48" EB, 72" H)

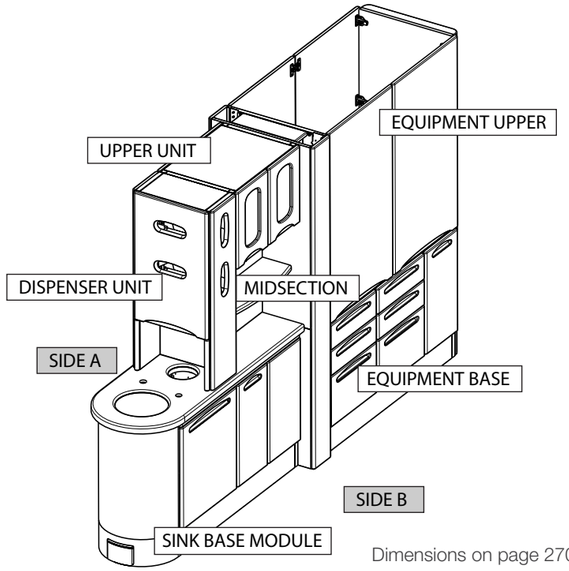

Dimensions on page 270.

Starting Price: $13,759

Starting price includes the following:

Sink Base Module
- White Corian® integrated sink, white faucet and soap dispenser (stainless steel option available at no charge)

Dispenser Unit
- Left or right hinge front door

Midsection
- Privacy Panel

Upper Unit
- Solid Doors

Equipment Base
- Solid Doors or CPU Doors

Equipment Upper
- Includes X-ray mount, choice of partial or full privacy panel

Countertop and fixed mid-shelf: choice of solid surface from the Midmark Corian® Guide.

Side Designation – standing at the sink, facing the Dispenser Unit, Side A is to the left and Side B is to the right.

ZONE OPTIONS

Sink Base

Tapmaster® Foot Activated Faucet
Deduction **-$330** FCC-NO TAP

Storage Options
Select from Sink Base Storage Configuration Section

Countertop Options
Laminate Deduction **-$800**
31100-01085
Corian® - Solid Surface Sink, White Faucet & Soap Dispenser **N/C**
31100-01086
Corian® - Undermount Stainless Steel Sink, Faucet & Soap Dispenser **N/C**
31100-01087
Zodiaq® - Undermount Stainless Steel Sink, Faucet & Soap Dispenser **$878**
31100-01088

Dispenser Unit

Glove Dispensers
___ Door (One **$72**)
Rt. Hinge 30300-01775
Lt. Hinge 30300-01776

___ Door (Two **$147**)
Rt. Hinge 30300-01773
Lt. Hinge 30300-01774

___ Side (One per each side **$146**)
Side A 30900-00721 **$73**
Side B 30900-00722 **$73**

___ Side (Two per each side **$292**)
Side A 30900-00719 **$146**
Side B 30900-00720 **$146**

Metal Shelves **$30 each**
30500-00264
Note: Two maximum – can only be used in place of side glove dispensers.

Midsection

Privacy Panel N/C
___ Center
30900-00711
___ A Side
30900-00712
___ B Side
30900-00713

Laminate Mid-shelf
Full Shelf **$169**
[A Side] 30500-00355
[B Side] 30500-00356
Half Shelf **$107 each**
[A Side] 30500-00357
[B Side] 30500-00358

Zodiaq® Mid-shelf
Full Shelf **$406**
[A Side] 30500-00363
[B Side] 30500-00364
Half Shelf **$254 each**
[A Side] 30500-00365
[B Side] 30500-00366

Corian® Mid-shelf
Full Shelf **$337**
[A Side] 30500-00359
[B Side] 30500-00360
Half Shelf **$219 each**
[A Side] 30500-00361
[B Segment] 30500-00362

BACK TO CONTENTS

Integra™ Freestanding Center Console
FCC11272 (112" L, 48" EB, 72" H)

ZONE OPTIONS

Upper Unit

Task Light
___ A Side Only **$169**
30900-00715
___ B Side Only **$169**
30900-00716
___ Two (Requires centered privacy panel) **$338**
[A Side] 30900-00717
[B Side] 30900-00718

Window Doors **$286**
4 Total (2 per side)
31600-01065

Adjustable Metal Shelves **$30 Each**
30500-00376

Equipment Base

Open Delivery with 12" Storage & Privacy Panel **N/C**
Delivery Open to:
_____ A Side
30100-01586
_____ B Side
30100-01587
12" Storage Options:
_____ Solid Doors
31600-01070
_____ CPU Vented Doors
31600-01071
Adjustable Metal Shelves **$30 each** 30500-00277

Triple Storage
- Select storage module 1 & 2 from storage configuration section
Module 1 (closest to sink base)
Module 2 (center module)
- Select storage module 3 as full door or CPU door **N/C**
Module 3 (end of cabinet)
Full door 31600-01070
CPU door 31600-01071

Laminate Countertop **N/C**
31100-01092
Corian® Upcharge **$1,002**
31100-01094
Zodiaq® Upcharge **$1,311**
31100-01096
Bi-Fold Door Grey Laminate Top **N/C**
3100-01090

Equipment Upper

X-ray Privacy Panel **N/C**
___ A Side
30900-00793
___ B Side
30900-00794
___ Center
30900-00752

X-ray Mount **N/C**
-Specify Model

Bi-fold Doors **$1,239**
30300-01804

Bi-fold Door Interior Options
X-ray Mount **N/C**
-Specify Model

Door Interlock **$242**
30900-00338

Full Privacy Panel **N/C**
___ A Side
30900-00789
___ B Side
30900-00790
___ Center
30900-00750

Pass-through Storage **$362**
30900-00743
With Adjustable Shelves **$57 Each**
30500-00373

Split Storage (Shown at left) **$676**
30900-00746
With Adjustable Shelves **$30 Each**
30500-00276

BACK TO CONTENTS

SINK BASE CONFIGURATIONS

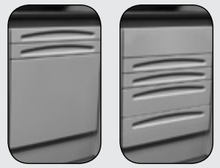

SB-001 **$484**
[A Side] (2) 2" Drawers, FF
[B Side] FF, (2) 2", (2) 4" Drawers
SB-007 **$484**
[A Side] FF, (2) 2", (2) 4" Drawers
[B Side] (2) 2" Drawers, FF

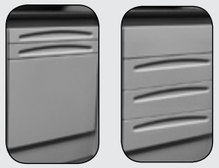

SB-002 **$484**
[A Side] (2) 2" Drawers, FF
[B Side] FF, (3) 4" Drawers
SB-008 **$484**
[A Side] FF, (3) 4" Drawers
[B Side] (2) 2" Drawers, FF

SB-003 **$484**
[A Side] (2) 2" Drawers, FF
[B Side] FF, (1) 4", (1) 8" Drawers
SB-009 **$484**
[A Side] FF, (1) 4", (1) 8" Drawers
[B Side] (2) 2" Drawers, FF

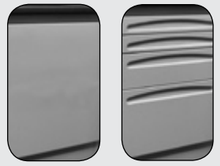

SB-004 **$484**
[A Side] FF
[B Side] (2) 2", (1) 4", (1) 8" Drawers
SB-010 **$484**
[A Side] (2) 2", (1) 4", (1) 8" Drawers
[B Side] FF

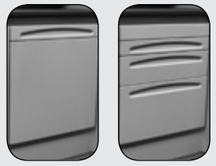

SB-005 **$484**
[A Side] (1) 2" Drawer, FF
[B Side] FF, (1) 2", (1) 4", (1) 8" Drawers
SB-011 **$484**
[A Side] FF, (1) 2", (1) 4", (1) 8" Drawers
[B Side] (1) 2" Drawer, FF

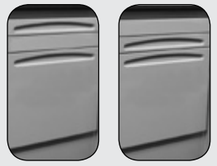

SB-006 **$242**
[A Side] (1) 2" Drawer, FF, Door
[B Side] FF, (1) 2" Drawer, Door
SB-012 **$242**
[A Side] FF, (1) 2" Drawer, Door
[B Side] (1) 2" Drawer, FF, Door

Sink Base Storage - Interior Door Options

Adjustable Metal Shelf **$30 each**
30500-00261

Pull-out Shelf **$123 each**
30500-00354

CPU Fan **$169**
30900-00801

Swing-out Shelf **$197 each**
_____ Left Hand 30900-00857
_____ Right Hand 30900-00856

Swing-out Tub **$197 each**
_____ Left Hand 30900-00859
_____ Right Hand 30900-00858

BACK TO CONTENTS

Integra™ Freestanding Center Console
FCC11272 (112" L, 48" EB, 72" H)

EQUIPMENT BASE CONFIGURATION

Module 1 & 2 Only

EB-18-001 **N/C**
[A Side] Solid Door
[B Side] Solid Door

EB-18-002 **N/C**
[A Side] CPU Door
[B Side] CPU Door

EB-18-003 **$484**
[A Side] FF, (2) 4" Drawers
[B Side] (2) 4" Drawers, FF
EB-18-007 **$484**
[A Side] (2) 4" Drawers, FF
[B Side] FF, (2) 4" Drawers

EB-18-004 **$484**
[A Side] FF, (1) 8" Drawer
[B Side] (1) 8" Drawer, FF
EB-18-008 **$484**
[A Side] (1) 8" Drawer, FF
[B Side] FF, (1) 8" Drawer

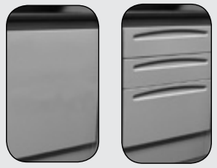

EB-18-005 **$484**
[A Side] FF
[B Side] (2) 4", (1) 8" Drawers
EB-18-009 **$484**
[A Side] (2) 4", (1) 8" Drawers
[B Side] FF

EB-18-006 **$242**
[A Side] FF, Door
[B Side] (1) 4" Drawer, Door
EB-18-010 **$242**
[A Side] (1) 4" Drawer, Door
[B Side] FF, Door

Equipment Base Storage - Interior Door Options

Adjustable Metal Shelf **$30 Each**
[Module 1 & 2] 30500-00371
[Module 3] 30500-00383

Pull-out Shelf **$123 Each**
30500-00375
Note: Only available in Module 1 & 2

CPU Fan **$169**
30900-00801

Note: These part numbers and pricing are for ordering a complete FCC11272. If reconfiguration is requested or parts are needed, please contact Customer Experience for service part numbers and pricing.

BACK TO CONTENTS

Integra™ Freestanding Center Console
FCC11272 (112" L, 48" EB, 72" H) ORDER FORM

Copy-Complete-Send

Starting Price $13,759
☐ **FCC11272**

Sink Base Module
☐ Delete Tapmaster® (-$330) $ _____
Storage Module
Config: _____ $ _____
Interior: _____ $ _____

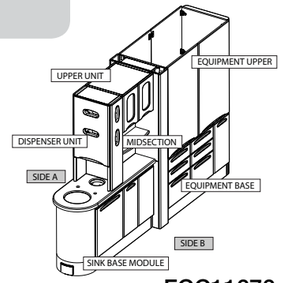

FCC11272

Dispenser Unit
Glove Dispenser
Door ☐ One ($72) ☐ Two ($147) $ _____
Door Hinges ☐ Left ☐ Right
Side ☐ One/side ($146) ☐ Two/side ($293) _____
Metal Shelves (2 max. $30 each) Qty: _____ _____

Mid-section
Privacy Panel
☐ Center ☐ A Side ☐ B Side N/C
Fixed Mid-shelf: $ _____
☐ Laminate ($169 Full, $107/Half))
☐ Corian® Solid Surface ($338 Full, $219/Half)
☐ Zodiaq® Quartz ($406 Full, $254/Half)

Equipment Base
Open Delivery & Privacy Panel N/C
Delivery open to: ☐ A Side ☐ B Side
Triple Storage
Module 1 Config: _____ $ _____
Door Storage Options: _____ _____
Module 2 Config: _____ _____
Door Storage Options: _____ _____
Module 3 ☐ Door ☐ CPU Door N/C
Door Storage Options: _____ _____

Upper Unit
Task Light
One ($169) - Specify ☐ A Side ☐ B Side $_____
Two ($337)
Window Doors - 2 per side ($286) _____
Metal Shelves ($30 each) Qty: _____ _____

Equipment Upper
☐ X-ray Mount Panel N/C
Specify Model:
☐ Partial Panel ☐ X-ray ☐ Full N/C
Specify: ☐ Center ☐ A Side ☐ B Side
☐ Bi-fold Doors ($1,239) $_____
Interior Options:
☐ Door Inter-lock ($242) _____
☐ Pass-through Storage ($362) _____
☐ Pass-through Storage Shelves ($57 each)
Qty: _____ _____
☐ Split Storage ($676) _____
☐ Split Storage Shelves ($30 each)
Qty: _____ _____
☐ Lead Lining FCC-LEAD-72 (Call for Pricing)
* Requires extended lead time

Countertops
Standard Laminate Deduction (-$800) Specify Color:_____ $_____
Standard Corian® Solid Surface Specify Color: _____ N/C
Includes Solid Surface Sink, White Faucet & Soap Dispenser N/C
Optional Stainless Steel Undermount Sink with Matching Faucet & Soap Dispenser N/C
Bi-fold Doors (Corian® Sink Side Only, Grey Laminate Equip. End-Included) N/C
No Bi-fold Doors (Corian® both Sink & Equip. End $1,002) _____
Standard Zodiaq® Quartz Specify Color:_____ _____
Includes Stainless Steel Sink with Matching Faucet & Soap Dispenser
Bi-fold Doors (Zodiaq® Sink Side Only, Grey Laminate Equip. End $878) _____
No Bi-fold Doors (Zodiaq® both Sink & Equipment End $2,190) _____
Special Color Upgrade (FCC-SPEC COLOR $394) Specify Color:_____ _____

Cabinet Panel Color
☐ Bark ☐ Harmony White ☐ Summer Apple
☐ Crossfire Java ☐ Honey Maple ☐ Violin Figured Annigre
☐ Dark Walnut ☐ Pebble Grey
☐ Fusion Maple ☐ Shark Grey ☐ Wild Cherry
☐ Golden Anigre ☐ Shimmer

Total Cabinet Price $_____

BACK TO CONTENTS

Integra™ Freestanding Center Console
FCC10690 (106" L, 42" EB, 90" H)

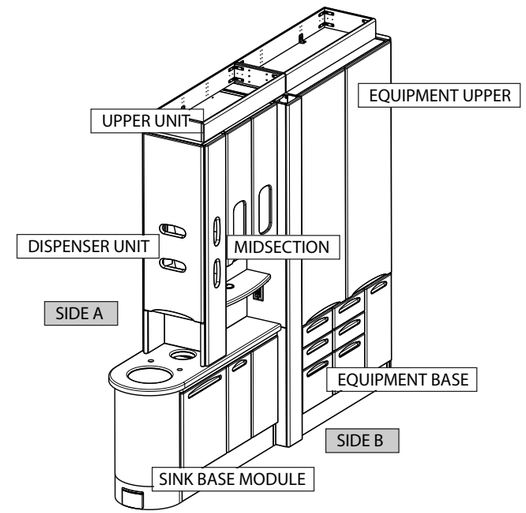

Dimensions on page 269.

Starting Price: $14,838

Starting price includes the following:
Sink Base Module
- White Corian® integrated sink, white faucet and soap dispenser (Stainless Steel option available at no charge)

Dispenser Unit
- Left or right hinge front door

Midsection
- Privacy Panel

Upper Unit
- Solid Doors

Equipment Base
- Solid Doors or CPU Doors, laminate top

Equipment Upper
- Includes X-ray mount, choice of partial or full privacy panel

Countertop and fixed mid-shelf: choice of solid surface from the Midmark Corian® Guide.

Side Designation – standing at the sink, facing the Dispenser Unit, Side A is to the left and Side B is to the right.

ZONE OPTIONS

Sink Base

Tapmaster® Foot Activated Faucet
Deduction **-$330** FCC-NO TAP

Storage Options
Select from Sink Base Storage Configuration Section

Countertop Options
Laminate Deduction **-$800**
31100-01085
Corian® - Solid Surface Sink, White Faucet & Soap Dispenser **N/C**
31100-01086

Corian® - Undermount Stainless Steel Sink, Faucet & Soap Dispenser **N/C**
31100-01087
Zodiaq® - Undermount Stainless Steel Sink, Faucet & Soap Dispenser **$878**
31100-01088

Dispenser Unit

Glove Dispensers
___ Door (One **$72**)
Rt. Hinge 30300-01781
Lt. Hinge 30300-01782

___ Door (Two **$147**)
Rt. Hinge 30300-01779
Lt. Hinge 30300-01780

___ Side (One per each side **$146**)
Side A 30900-00727 **$73**
Side B 30900-00728 **$73**

___ Side (Two per each side **$292**)
Side A 30900-00725 **$146**
Side B 30900-00726 **$146**

Metal Shelves **$30 each**
30500-00264
Note: One included. Three maximum. Number 2 & 3 can only be used in place of side glove dispenser.

Midsection

Privacy Panel **N/C**
___ Center
30900-00711
___ A Side
30900-00712
___ B Side
30900-00713

Laminate Mid-shelf
Full Shelf **$169**
[A Side] 30500-00355
[B Side] 30500-00356
Half Shelf **$107 each**
[A Side] 30500-00357
[B Side] 30500-00358

Zodiaq® Mid-shelf
Full Shelf **$406**
[A Side] 30500-00363
[B Side] 30500-00364
Half Shelf **$254 each**
[A Side] 30500-00365
[B Side] 30500-00366

Corian® Mid-shelf
Full Shelf **$337**
[A Side] 30500-00359
[B Side] 30500-00360
Half Shelf **$219 each**
[A Side] 30500-00361
[B Side] 30500-00362

BACK TO CONTENTS

ZONE OPTIONS

Upper Unit

Task Light
___ A Side Only **$169**
30900-00715
___ B Side Only **$169**
30900-00716
___ Two (Requires centered privacy panel) **$338**
[A Side] 30900-00717
[B Side] 30900-00718

Window Doors **$286**
4 Total (2 per side)
31600-01068

Adjustable Metal Shelves **$30 Each**
30500-00376

Equipment Base

Open Delivery with Privacy Panel **N/C**
Delivery open to:
___ A Side
30800-00121
___ B Side
30800-00122

Laminate Countertop **N/C**
31100-01091
Corian® Upcharge **$1,002**
31100-01093
Zodiaq® Upcharge **$1,311**
31100-01095
Grey Laminate Top **N/C**
31100-01089

Triple Storage
- Select storage module 1 & 2 from storage configuration section
Module 1 (closest to sink base)
Module 2 (center module)
- Select storage module 3 as full door or CPU door **N/C**
Module 3 (end of cabinet)
Full door 31600-01070
CPU door 31600-01071

Equipment Upper

X-ray Privacy Panel **N/C**
___ A Side
30900-00791
___ B Side
30900-00792
___ Center
30900-00751

X-ray Mount **N/C**
-Specify Model

Full Privacy Panel **N/C**
___ A Side
30900-00787
___ B Side
30900-00788
___ Center
30900-00749

Bi-fold Doors **$1,408**
30300-01805

Bi-fold Door Interior Options **N/C**
X-ray Mount
-Specify Model

Door Interlock **$242**
30900-00338

Pass-through Storage **$427**
30900-00744
With Adjustable Shelves **$57 Each**
30500-00372

Split Storage (Shown at left) **$788**
30900-00747
With Adjustable Shelves **$30 Each**
30500-00275

5" Top Extension **$563**
31300-00564

Integra™ Freestanding Center Console
FCC10690 (106" L, 42" EB, 90" H)

SINK BASE CONFIGURATIONS

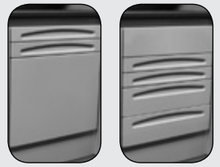

SB-001 **$484**
[A Side] (2) 2" Drawers, FF
[B Side] FF, (2) 2", (2) 4" Drawers
SB-007 **$484**
[A Side] FF, (2) 2", (2) 4" Drawers
[B Side] (2) 2" Drawers, FF

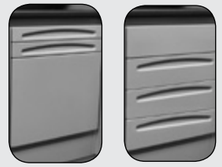

SB-002 **$484**
[A Side] (2) 2" Drawers, FF
[B Side] FF, (3) 4" Drawers
SB-008 **$484**
[A Side] FF, (3) 4" Drawers
[B Side] (2) 2" Drawers, FF

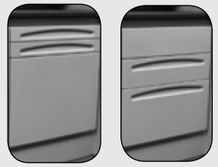

SB-003 **$484**
[A Side] (2) 2" Drawers, FF
[B Side] FF, (1) 4", (1) 8" Drawers
SB-009 **$484**
[A Side] FF, (1) 4", (1) 8" Drawers
[B Side] (2) 2" Drawers, FF

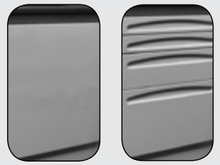

SB-004 **$484**
[A Side] FF
[B Side] (2) 2", (1) 4", (1) 8" Drawers
SB-010 **$484**
[A Side] (2) 2", (1) 4", (1) 8" Drawers
[B Side] FF

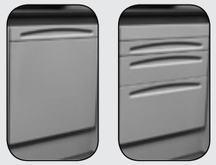

SB-005 **$484**
[A Side] (1) 2" Drawer, FF
[B Side] FF, (1) 2", (1) 4", (1) 8" Drawers
SB-011 **$484**
[A Side] FF, (1) 2", (1) 4", (1) 8" Drawers
[B Side] (1) 2" Drawer, FF

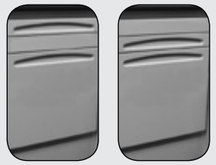

SB-006 **$242**
[A Side] (1) 2" Drawer, FF, Door
[B Side] FF, (1) 2" Drawer, Door
SB-012 **$242**
[A Side] FF, (1) 2" Drawer, Door
[B Side] (1) 2" Drawer, FF, Door

Sink Base Storage - Interior Door Options

Adjustable Metal Shelf **$30 each**
30500-00261

Pull-out Shelf **$123 each**
30500-00354

CPU Fan **$169**
30900-00801

Swing-out Shelf **$197 each**
_____ Left Hand 30900-00857
_____ Right Hand 30900-00856

Swing-out Tub **$197 each**
_____ Left Hand 30900-00859
_____ Right Hand 30900-00858

Integra™ Freestanding Center Console
FCC10690 (106" L, 42" EB, 90" H)

EQUIPMENT BASE CONFIGURATION

Module 1 & 2 Only

EB-15-001 **N/C**
[A Side] Solid Door
[B Side] Solid Door

EB-15-002 **N/C**
[A Side] CPU Door
[B Side] CPU Door

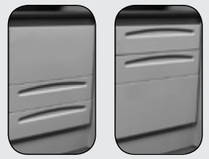

EB-15-003 **$484**
[A Side] FF, (2) 4" Drawers
[B Side] (2) 4" Drawers, FF
EB-15-007 **$484**
[A Side] (2) 4" Drawers, FF
[B Side] FF, (2) 4" Drawers

EB-15-004 **$484**
[A Side] FF, (1) 8" Drawer
[B Side] (1) 8" Drawer, FF
EB-15-008 **$484**
[A Side] (1) 8" Drawer, FF
[B Side] FF, (1) 8" Drawer

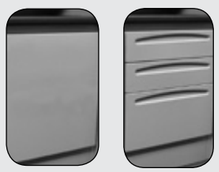

EB-15-005 **$484**
[A Side] FF
[B Side] (2) 4", (1) 8" Drawers
EB-15-009 **$484**
[A Side] (2) 4", (1) 8" Drawers
[B Side] FF

EB-15-006 **$242**
[A Side] FF, Door
[B Side] (1) 4" Drawer, Door
EB-15-010 **$242**
[A Side] (1) 4" Drawer, Door
[B Side] FF, Door

Equipment Base Storage - Interior Door Options

Adjustable Metal Shelf **$30 Each**
[Module 1 & 2] 30500-00370
[Module 3] 30500-00383

Pull-out Shelf **$123 Each**
30500-00374
Note: Only available in Module 1 & 2

CPU Fan **$169**
30900-00801

Note: These part numbers and pricing are for ordering a complete FCC10690. If reconfiguration is requested or parts are needed, please contact Customer Experience for service part numbers and pricing.

BACK TO CONTENTS

Integra™ Freestanding Center Console
FCC10690 (106" L, 42" EB, 90" H) ORDER FORM

Copy-Complete-Send

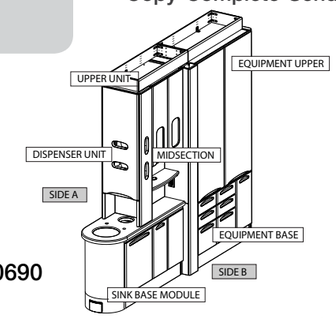

FCC10690

Starting Price $14,838
☐ **FCC10690**

Sink Base Module
☐ Delete Tapmaster® (-$330) $ _____
Storage Module
Config: _____ $ _____
Interior: _____ $ _____

Dispenser Unit
Glove Dispenser
Door ☐ One ($72) ☐ Two ($147) $ _____
Door Hinges ☐ Left ☐ Right
Side ☐ One/side ($146) ☐ Two/side ($293) _____
Metal Shelves (3 max. $30 each) Qty: _____ _____

Mid-section
Privacy Panel
☐ Center ☐ A Side ☐ B Side N/C
Fixed Mid-shelf: $ _____
☐ Laminate ($169 Full, $107/Half))
☐ Corian® Solid Surface ($338 Full, $219/Half)
☐ Zodiaq® Quartz ($406 Full, $254/Half)

Equipment Base
Open Delivery & Privacy Panel N/C
Delivery open to: ☐ A Side ☐ B Side
Triple Storage
Module 1 Config: _____ $ _____
Door Storage Options: _____ _____
Module 2 Config: _____ _____
Door Storage Options: _____ _____
Module 3 ☐ Door ☐ CPU Door N/C
Door Storage Options: _____ _____

Upper Unit
Task Light
One ($169) - Specify ☐ A Side ☐ B Side $_____
Two ($337)
Window Doors - 2 per side ($286) _____
Metal Shelves ($30 each) Qty: _____ _____

Equipment Upper
☐ X-ray Mount Panel N/C
Specify Model:
☐ Partial Privacy Panel ☐ X-ray ☐ Full N/C
Specify: ☐ Center ☐ A Side ☐ B Side
☐ Bi-fold Doors ($1,408) $_____
Interior Options:
☐ Door Inter-lock ($242) _____
☐ Pass-through Storage ($427) _____
☐ Pass-through Storage Shelves ($57 each)
Qty: _____ _____
☐ Split Storage ($788) _____
☐ Split Storage Shelves ($30 each)
Qty: _____ _____
☐ Lead Lining FCC-LEAD-90 (Call for Pricing)
* Requires extended lead time
☐ 5" Top Extension ($563) _____

Countertops
Standard Laminate Deduction (-$800) Specify Color:_____ $_____
Standard Corian® Solid Surface Specify Color: _____ N/C
Includes Solid Surface Sink, White Faucet & Soap Dispenser N/C
Optional Stainless Steel Undermount Sink with Matching Faucet & Soap Dispenser N/C
Bi-fold Doors (Corian® Sink Side Only, Grey Laminate Equip. End-Included) N/C
No Bi-fold Doors (Corian® both Sink & Equip. End $1,002) _____
Standard Zodiaq® Quartz Specify Color:_____ _____
Includes Stainless Steel Sink with Matching Faucet & Soap Dispenser
Bi-fold Doors (Zodiaq® Sink Side Only, Grey Laminate Equip. End $878) _____
No Bi-fold Doors (Zodiaq® both Sink & Equipment End $2,190) _____
Special Color Upgrade (FCC-SPEC COLOR $394) Specify Color:_____ _____

Cabinet Panel Color
☐ Bark ☐ Harmony White ☐ Summer Apple
☐ Crossfire Java ☐ Honey Maple ☐ Violin Figured Annigre
☐ Dark Walnut ☐ Pebble Grey
☐ Fusion Maple ☐ Shark Grey ☐ Wild Cherry
☐ Golden Anigre ☐ Shimmer

Total Cabinet Price $_____

BACK TO CONTENTS

Integra™ Freestanding Center Console
FCC11290 (112" L, 48" EB, 90" H)

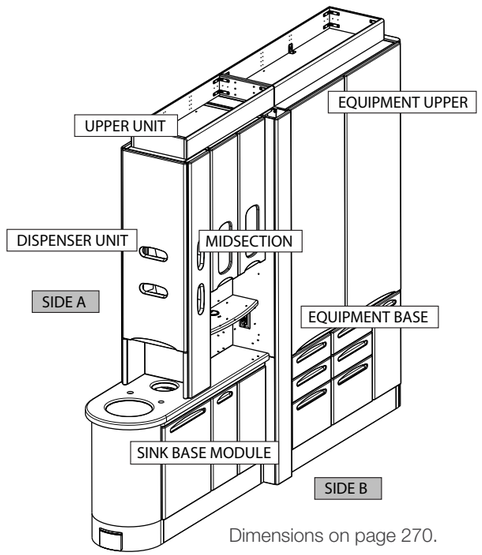

Dimensions on page 270.

Starting Price: $15,199

Starting price includes the following:

Sink Base Module
- White Corian® integrated sink, white faucet and soap dispenser (stainless steel option available at no charge)

Dispenser Unit
- Left or right hinge front door

Midsection
- Privacy Panel

Upper Unit
- Solid Doors

Equipment Base
- Solid Doors or CPU Doors, laminate top

Equipment Upper
- Includes X-ray mount, choice of partial or full privacy panel

Countertop and fixed mid-shelf: choice of solid surface from the Midmark Corian® Guide.

Side Designation – standing at the sink, facing the Dispenser Unit, Side A is to the left and Side B is to the right.

ZONE OPTIONS

Sink Base

Tapmaster® Foot Activated Faucet
Deduction **-$330** FCC-NO TAP

Storage Options
Select from Sink Base Storage Configuration Section

Countertop Options
Laminate Deduction **-$800**
31100-01085
Corian® - Solid Surface Sink, White Faucet & Soap Dispenser **N/C**
31100-01086
Corian® - Undermount Stainless Steel Sink, Faucet & Soap Dispenser **N/C**
31100-01087
Zodiaq® - Undermount Stainless Steel Sink, Faucet & Soap Dispenser **$878**
31100-01088

Dispenser Unit

Glove Dispensers
___ Door (One **$72**)
Rt. Hinge 30300-01781
Lt. Hinge 30300-01782

___ Door (Two **$147**)
Rt. Hinge 30300-01779
Lt. Hinge 30300-01780

___ Side (One per each side **$146**)
Side A 30900-00727 **$73**
Side B 30900-00728 **$73**

___ Side (Two per side **$292**)
Side A 30900-00725 **$146**
Side B 30900-00726 **$146**

Metal Shelves **$30 each**
30500-00264
Note: One included. Three maximum. Number 2 & 3 can only be used in place of side glove dispenser.

Midsection

Privacy Panel **N/C**
___ Center
30900-00711
___ A Side
30900-00712
___ B Side
30900-00713

Laminate Mid-shelf
Full Shelf **$169**
[A Side] 30500-00355
[B Side] 30500-00356
Half Shelf **$107 each**
[A Side] 30500-00357
[B Side] 30500-00358

Zodiaq® Mid-shelf
Full Shelf **$406**
[A Side] 30500-00363
[B Side] 30500-00364
Half Shelf **$254 each**
[A Side] 30500-00365
[B Side] 30500-00366

Corian® Mid-shelf
Full Shelf **$337**
[A Side] 30500-00359
[B Side] 30500-00360
Half Shelf **$219 each**
[A Side] 30500-00361
[B Side] 30500-00362

BACK TO CONTENTS

Integra™ Freestanding Center Console
FCC11290 (112" L, 48" EB, 90" H)

ZONE OPTIONS

Upper Unit

Task Light
___ A Side Only **$169**
30900-00715
___ B Side Only **$1649**
30900-00716
___ Two (Requires centered privacy panel) **$338**
[A Side] 30900-00717
[B Side] 30900-00718

Window Doors **$286**
4 Total (2 per side)
31600-01068

Adjustable Metal Shelves **$30 Each**
30500-00376

Equipment Base

Open Delivery with 12" Storage & Privacy Panel **N/C**
Delivery Open to:
_____ A Side
30100-01586
_____ B Side
30100-01587
12" Storage Options:
_____ Solid Doors
31600-01070
_____ CPU Vented Doors
31600-01071
Adjustable Metal Shelves **$30 each** 30500-00277

Triple Storage
- Select storage module 1 & 2 from storage configuration section
Module 1 (closest to sink base)
Module 2 (center module)
- Select storage module 3 as full door or CPU door **N/C**
Module 3 (end of cabinet)
Full door 31600-01070
CPU door 31600-01071

Laminate Countertop **N/C**
31100-01092
Corian® Upcharge **$1,002**
31100-01094
Zodiaq® Upcharge **$1,311**
31100-01096
Bi-Fold Door Grey Laminate Top **N/C**
31100-01090

Equipment Upper

X-ray Privacy Panel **N/C**
___ A Side
30900-00793
___ B Side
30900-00794
___ Center
30900-00752

X-ray Mount **N/C**
-Specify Model

Bi-fold Doors **$1,408**
30300-01806

Bi-fold Door Interior Options
X-ray Mount **N/C**
-Specify Model

Door Interlock **$242**
30900-00338

Full Privacy Panel **N/C**
___ A Side
30900-00789
___ B Side
30900-00790
___ Center
30900-00750

Pass-through Storage **$427**
30900-00744
With Adjustable Shelves **$57 Each**
30500-00373

Split Storage (Shown at left) **$788**
30900-00748
With Adjustable Shelves **$30 Each**
30500-00276

5" Top Extension **$563**
31300-00565

BACK TO CONTENTS

SINK BASE CONFIGURATIONS

SB-001 **$484**
[A Side] (2) 2" Drawers, FF
[B Side] FF, (2) 2", (2) 4" Drawers
SB-007 **$484**
[A Side] FF, (2) 2", (2) 4" Drawers
[B Side] (2) 2" Drawers, FF

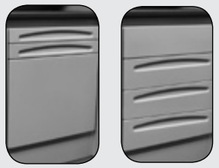

SB-002 **$484**
[A Side] (2) 2" Drawers, FF
[B Side] FF, (3) 4" Drawers
SB-008 **$484**
[A Side] FF, (3) 4" Drawers
[B Side] (2) 2" Drawers, FF

SB-003 **$484**
[A Side] (2) 2" Drawers, FF
[B Side] FF, (1) 4", (1) 8" Drawers
SB-009 **$484**
[A Side] FF, (1) 4", (1) 8" Drawers
[B Side] (2) 2" Drawers, FF

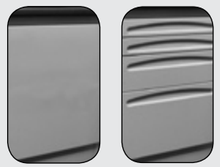

SB-004 **$484**
[A Side] FF
[B Side] (2) 2", (1) 4", (1) 8" Drawers
SB-010 **$484**
[A Side] (2) 2", (1) 4", (1) 8" Drawers
[B Side] FF

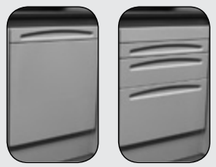

SB-005 **$484**
[A Side] (1) 2" Drawer, FF
[B Side] FF, (1) 2", (1) 4", (1) 8" Drawers
SB-011 **$484**
[A Side] FF, (1) 2", (1) 4", (1) 8" Drawers
[B Side] (1) 2" Drawer, FF

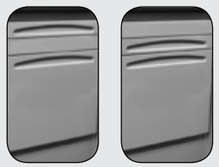

SB-006 **$242**
[A Side] (1) 2" Drawer, FF, Door
[B Side] FF, (1) 2" Drawer, Door
SB-012 **$242**
[A Side] FF, (1) 2" Drawer, Door
[B Side] (1) 2" Drawer, FF, Door

Sink Base Storage - Interior Door Options

Adjustable Metal Shelf **$30 each**
30500-00261

Pull-out Shelf **$123 each**
30500-00354

CPU Fan **$169**
30900-00801

Swing-out Shelf **$197 each**
_____ Left Hand 30900-00857
_____ Right Hand 30900-00856

Swing-out Tub **$197 each**
_____ Left Hand 30900-00859
_____ Right Hand 30900-00858

Integra™ Freestanding Center Console
FCC11290 (112" L, 48" EB, 90" H)

EQUIPMENT BASE CONFIGURATION

Module 1 & 2 Only

EB-18-001 **N/C**
[A Side] Solid Door
[B Side] Solid Door

EB-18-002 **N/C**
[A Side] CPU Door
[B Side] CPU Door

EB-18-003 **$484**
[A Side] FF, (2) 4" Drawers
[B Side] (2) 4" Drawers, FF
EB-18-007 **$484**
[A Side] (2) 4" Drawers, FF
[B Side] FF, (2) 4" Drawers

EB-18-004 **$484**
[A Side] FF, (1) 8" Drawer
[B Side] (1) 8" Drawer, FF
EB-18-008 **$484**
[A Side] (1) 8" Drawer, FF
[B Side] FF, (1) 8" Drawer

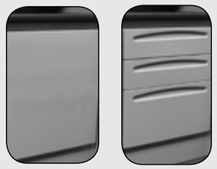

EB-18-005 **$484**
[A Side] FF
[B Side] (2) 4", (1) 8" Drawers
EB-18-009 **$484**
[A Side] (2) 4", (1) 8" Drawers
[B Side] FF

EB-18-006 **$242**
[A Side] FF, Door
[B Side] (1) 4" Drawer, Door
EB-18-010 **$242**
[A Side] (1) 4" Drawer, Door
[B Side] FF, Door

Equipment Base Storage - Interior Door Options

Adjustable Metal Shelf **$30 Each**
[Module 1 & 2] 30500-00371
[Module 3] 30500-00383

Pull-out Shelf **$123 Each**
30500-00375
Note: Only available in Module 1 & 2

CPU Fan **$169**
30900-00801

Note: These part numbers and pricing are for ordering a complete FCC11290. If reconfiguration is requested or parts are needed, please contact Customer Experience for service part numbers and pricing.

Integra™ Freestanding Center Console
FCC11290 (112" L, 48" EB, 90" H) ORDER FORM

Copy-Complete-Send

Starting Price $15,199
☐ **FCC11290**

Sink Base Module
☐ Delete Tapmaster® (-$330) $ _____
Storage Module
Config: _____ $ _____
Interior: _____ $ _____

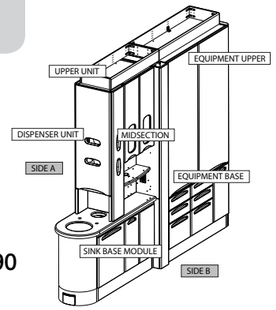

FCC11290

Dispenser Unit
Glove Dispenser
Door ☐One ($72) ☐ Two ($147) $ _____
Door Hinges ☐Left ☐ Right
Side ☐ One/side ($146) ☐ Two/side ($293) _____
Metal Shelves (3 max. $30 each) Qty: _____ _____

Mid-section
Privacy Panel
☐ Center ☐A Side ☐B Side N/C
Fixed Mid-shelf: $ _____
☐ Laminate ($169 Full, $107/Half))
☐ Corian® Solid Surface ($338 Full, $219/Half)
☐ Zodiaq® Quartz ($406 Full, $254/Half)

Equipment Base
Open Delivery & 12" Storage N/C
Delivery open to: ☐ A Side ☐B Side
12" Storage: ☐Solid Door ☐CPU Door
Triple Storage
Module 1 Config: _____ $ _____
Door Storage Options: _____ _____
Module 2 Config: _____ _____
Door Storage Options: _____ _____
Module 3 ☐Door ☐CPU Door N/C
Door Storage Options: _____ _____

Upper Unit
Task Light
One ($169) - Specify ☐ A Side ☐B Side $_____
Two ($337)
Window Doors - 2 per side ($286) _____
Metal Shelves ($30 each) Qty: _____ _____

Equipment Upper
☐ X-ray Mount Panel N/C
Specify Model:
☐ Privacy Panel ☐X-ray ☐ Full N/C
Specify: ☐ Center ☐A Side ☐B Side
☐ Bi-fold Doors ($1,408) $_____
Interior Options:
☐ Door Inter-lock ($242) _____
☐ Pass-through Storage ($427) _____
☐ Pass-through Storage Shelves ($57 each)
Qty: _____ _____
☐ Split Storage ($788) _____
☐ Split Storage Shelves ($30 each)
Qty: _____ _____
☐Lead Lining FCC-LEAD-90 (Call for Pricing)
* Requires extended lead time
☐5" Top Extension ($563) _____

Countertops
Standard Laminate Deduction (-$800) Specify Color:_____ $_____
Standard Corian® Solid Surface Specify Color: _____ N/C
Includes Solid Surface Sink, White Faucet & Soap Dispenser N/C
Optional Stainless Steel Undermount Sink with Matching Faucet & Soap Dispenser N/C
Bi-fold Doors (Corian® Sink Side Only, Grey Laminate Equip. End-Included) N/C
No Bi-fold Doors (Corian® both Sink & Equip. End $1,002) _____
Standard Zodiaq® Quartz Specify Color:_____ _____
Includes Stainless Steel Sink with Matching Faucet & Soap Dispenser
Bi-fold Doors (Zodiaq® Sink Side Only, Grey Laminate Equip. End $878) _____
No Bi-fold Doors (Zodiaq® both Sink & Equipment End $2,190) _____
Special Color Upgrade (FCC-SPEC COLOR $394) Specify Color:_____ _____

Cabinet Panel Color
☐ Bark ☐ Harmony White ☐ Summer Apple
☐ Crossfire Java ☐ Honey Maple ☐ Violin Figured Annigre
☐ Dark Walnut ☐ Pebble Grey
☐ Fusion Maple ☐ Shark Grey ☐ Wild Cherry
☐ Golden Anigre ☐ Shimmer

Total Cabinet Price $_____

BACK TO CONTENTS

Integra™ Operatory Side Casework

BACK TO CONTENTS

Pricing Example

Part #	Description	Price
OSC063R-R	Integra™ 63" Sink-Storage Unit	$5,517

Storage Configuration

OSC-24-005	2", 4" Drawers, Rt. Hinge Bi-fold Door	242

Countertop

	Standard Corian® Solid Surface Sink, White Faucet and Soap Dispenser	Included

Cabinet Panel Color

	Wild Cherry	Included

Upper Storage Unit

OUC024	24" Upper Storage Unit (Wild Cherry)	647
30300-01851 & 30300-01852	Window Doors, Rt. & Lt. Hinge	113
30500-00324	(2) 24" Adjustable Shelf	Included
30900-00812	Upper End Panels	Included

Glove/Towel/Cup Dispenser

OUC019D	Glove/Towel/Cup Dispenser (Wild Cherry)	507
30300-01862	Lt. Hinge Door	Included

Total $7,026

BACK TO CONTENTS

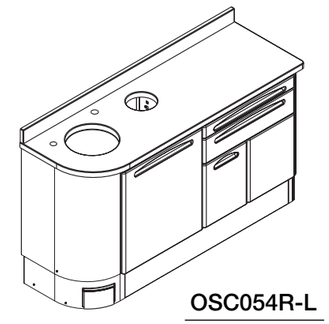

OSC054R-L

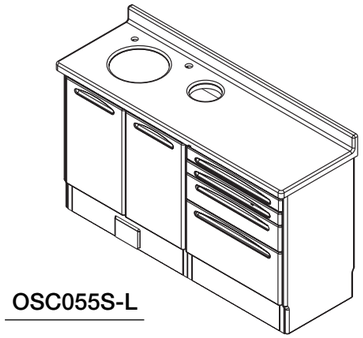

OSC055S-L

Starting Price: $5,067

Starting Price includes the following:

- Bi-fold doors on storage section
- Tapmaster® foot activated faucet
- Corian® solid surface countertop with solid surface sink, white faucet and soap dispenser (Stainless steel option available at no charge)

Configuration Illustrated on Left:

OSC054R-L	$5,067	
Storage Configuration (OSC-24-005)	242	(2", 4" Drawers, Rt. Hinge Bi-fold Doors)
Price with Standard Corian®	$5,309	

Configuration Illustrated on Right:

OSC055S-L	$5,067	
Storage Configuration (OSC-24-001)	484	(Two 2", 4", 8" Drawers)
Price with Standard Corian®	$5,551	

Countertop Length

- Includes .5" overhang on each side
- Rounded end sink with end panel on storage side (illustrated on left): 55.25"
- Squared end sink with end panel on storage side (illustrated on right): 56.25"

Ordering Notes

- Specify sink shape and sink end
  - o Rounded end sink - sink left (OSC054R-L)
  - o Rounded end sink - sink right (OSC054R-R)
  - o Squared end sink - sink left (OSC055S-L)
  - o Squared end sink - sink right (OSC055S-R)
- Select storage configuration
- Select options
- Specify countertop material and color
- Specify cabinet panel color

BACK TO CONTENTS

Storage Configurations

Part#	Description	Price
OSC-24-001	(2) 2", 4", 8" Drawers	$484
OSC-24-002	(2) 2", (3) 4" Drawers	484
OSC-24-003	(4) 4" Drawers	484
OSC-24-004	(2) 4", 8" Drawers	484
OSC-24-005	2", 4" Drawers, Rt. Hinge Bi-fold Door	242
OSC-24-006	2", 4" Drawers, Lt. Hinge Bi-fold Door	242

Drawer Storage Options

30900-00701	Writing Surface (in lieu of 2" drawer)	N/C
30900-00807	Glove or Tissue Dispenser (in lieu of 4" drawer)	N/C

Door Storage Options

30300-01845	CPU Vented Full Door; Right Hinge	N/C
30300-01846	CPU Vented Full Door; Left Hinge	N/C
30500-00380	Adjustable Shelf	$30
30500-00354	Pull-out Shelf	123
30900-00856	Swing-out Shelf, Right Mounted	197
30900-00857	Swing-out Shelf, Left Mounted	197
30900-00858	Swing-out Tub, Right Mounted	197
30900-00859	Swing-out Tub, Left Mounted	197
30900-00801	CPU Fan (attached to CPU vented door)	169

Other Options

OSC-LAM	Laminate Deduction	-$800
	Corian® Solid Surface Countertop Includes Solid Surface Sink, White Faucet and Soap Dispenser	N/C
	Corian® Solid Surface Countertop With Undermount Stainless Steel Sink, Matching Faucet and Soap Dispenser	N/C
OSC-ZOD	Zodiaq® Quartz Countertop Upgrade With Undermount Stainless Steel Sink, Matching Faucet and Soap Dispenser	878
OSC-SPEC COLOR	Special Countertop Color	310
OSC-NO TAP	Delete Tapmaster®	-330

Cabinet Panel Colors
Bark, Crossfire Java, Dark Walnut, Fusion Maple, Golden Anigre, Harmony White, Honey Maple, Pebble Grey, Shark Grey, Shimmer, Summer Apple, Violin Figured Annigre and Wild Cherry

Laminate Countertop Colors
Antique Roca, Brazilian Brown Granite, Brazilian Topaz, Bronzed Fusion, Butterum Granite, Colorado Slate, Ebony Fusion, Green Tigris, Jamocha Granite, Kalahari Topaz, Mesa Sand, Milano Quartz, Mystique Marine, Mystique Mount, Oxide and Smoky Topaz

Corian® Solid Surface Countertop Colors
Antarctica, Arrowroot, Blue Pebble, Blue Spice, Canyon, Clove, Cottage Lane, Earth, Granola, Hazelnut, Jasmine, Lava Rock, Pine, Sandstone, Sonora and Tumbleweed

Zodiaq® Quartz Countertop Colors
Black Forest, Borealis Blue, Cappuccino, Caraway, Cloud White, Smoky Topaz, Space Black, Storm Grey and Toasted Almond

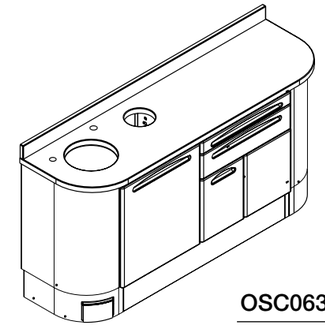

OSC063R-L

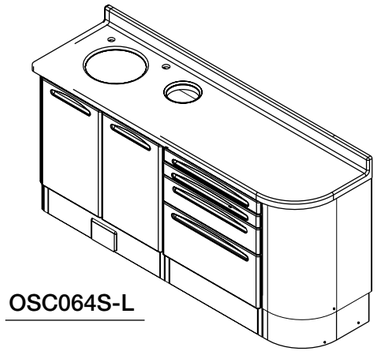

OSC064S-L

Starting Price: $5,517

Starting Price includes the following:
- Bi-fold doors on storage section
- Tapmaster® foot activated faucet
- Rounded end accessory on storage side
- Corian® solid surface countertop with solid surface sink, white faucet and soap dispenser (Stainless steel option available at no charge)

Configuration Illustrated on Left:

OSC063R-L	$5,517	
Storage Configuration (OSC-24-005)	242	(2", 4" Drawers, Rt. Hinge Bi-fold Doors)
Price with Standard Corian®	$5,759	

Configuration Illustrated on Right:

OSC064S-L	$5,517	
Storage Configuration (OSC-24-001)	484	(Two 2", 4", 8" Drawers)
Price with Standard Corian®	$6,001	

Countertop Length
- Includes .5" overhand on each side
- Rounded end sink (illustrated on left): 64.50"
- Squared end sink (illustrated on right): 65.50"

Ordering Notes
- Specify sink shape and sink end
  - o Rounded end sink - sink left (OSC063R-L)
  - o Rounded end sink - sink right (OSC063R-R)
  - o Squared end sink - sink left (OSC064S-L)
  - o Squared end sink - sink right (OSC064S-R)
- Select storage configuration
- Select options
- Specify countertop material and color
- Specify cabinet panel

Integra™ Operatory Side Casework 63" Sink-Storage Unit

Storage Configurations

Part#	Description	Price
OSC-24-001	(2) 2", 4", 8" Drawers	$484
OSC-24-002	(2) 2", (3) 4" Drawers	484
OSC-24-003	(4) 4" Drawers	484
OSC-24-004	(2) 4", 8" Drawers	484
OSC-24-005	2", 4" Drawers, Rt. Hinge Bi-fold Door	242
OSC-24-006	2", 4" Drawers, Lt. Hinge Bi-fold Door	242

Drawer Storage Options

30900-00701	Writing Surface (in lieu of 2" drawer)	N/C
30900-00807	Glove or Tissue Dispenser (in lieu of 4" drawer)	N/C

Door Storage Options

30300-01845	CPU Vented Full Door; Right Hinge	N/C
30300-01846	CPU Vented Full Door; Left Hinge	N/C
30500-00380	Adjustable Shelf	$30
30500-00354	Pull-out Shelf	123
30900-00856	Swing-out Shelf, Right Mounted	197
30900-00857	Swing-out Shelf, Left Mounted	197
30900-00858	Swing-out Tub, Right Mounted	197
30900-00859	Swing-out Tub, Left Mounted	197
30900-00801	CPU Fan (attached to CPU vented door)	169

Other Options

OSC-LAM	Laminate Deduction	-$800
	Corian® Solid Surface Countertop Includes Solid Surface Sink, White Faucet and Soap Dispenser	N/C
	Corian® Solid Surface Countertop With Undermount Stainless Steel Sink, Matching Faucet and Soap Dispenser	N/C
OSC-ZOD	Zodiaq® Quartz Countertop Upgrade With Undermount Stainless Steel Sink, Matching Faucet and Soap Dispenser	878
OSC-SPEC COLOR	Special Countertop Color	310
OSC-NO TAP	Delete Tapmaster®	-330

Cabinet Panel Colors
Bark, Crossfire Java, Dark Walnut, Fusion Maple, Golden Anigre, Harmony White, Honey Maple, Pebble Grey, Shark Grey, Shimmer, Summer Apple, Violin Figured Annigre and Wild Cherry

Laminate Countertop Colors
Antique Roca, Brazilian Brown Granite, Brazilian Topaz, Bronzed Fusion, Butterum Granite, Colorado Slate, Ebony Fusion, Green Tigris, Jamocha Granite, Kalahari Topaz, Mesa Sand, Milano Quartz, Mystique Marine, Mystique Mount, Oxide and Smoky Topaz

Corian® Solid Surface Countertop Colors
Antarctica, Arrowroot, Blue Pebble, Blue Spice, Canyon, Clove, Cottage Lane, Earth, Granola, Hazelnut, Jasmine, Lava Rock, Pine, Sandstone, Sonora and Tumbleweed

Zodiaq® Quartz Countertop Colors
Black Forest, Borealis Blue, Cappuccino, Caraway, Cloud White, Smoky Topaz, Space Black, Storm Grey and Toasted Almond

BACK TO CONTENTS

Integra™ Operatory Side Casework Cabinet Modules

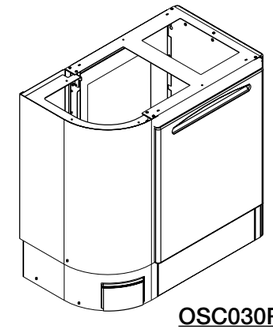

OSC030R-L

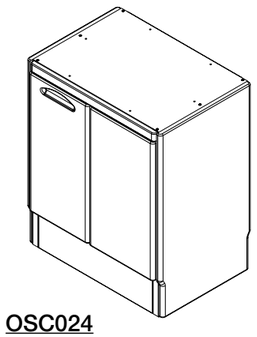

OSC024

Round End Accessory

Part#	Description	Module Length
OSC018S	18" Sink Unit	18.00"
OSC030R-L	30" Rounded Sink Unit, Left Sink	29.75"
OSC030R-R	30" Rounded Sink Unit, Right Sink	30"
OSC031S-L	31" Squared Sink Unit, Left Sink	30"
OSC031S-R	31" Squared Sink Unit, Right Sink	29.75"
OSC012	12" Storage or Waste Unit	12.50"
OSC015	15" Storage Unit	15.00"
OSC018	18" Storage Unit	18.00"
OSC024	24" Storage Unit	24.00"
OSC036D	36" Side Delivery Unit	36.00"
OSC042D	42" Side Delivery Unit	42.00"
OSC010L	Round End Accessory (Left Side)	10"
OSC010R	Round End Accessory (Right Side)	10"
30900-00810	End Panel	.75"
30900-00811	End Panel (for side delivery modules only)	.75"

Ordering Notes

- The cabinet modules can be ordered in combination to create a custom length run of cabinetry.
- All cabinet modules are priced without countertops and countertop accessories. Please see page 166 for this information.
- The cabinet modules do not include finished end panels. For modules that will be at the end of a series of cabinets, you must specify an End Panel or Round End Accessory to provide a finished appearance.
- Overall Cabinet Length:
  Add up the lengths specified with the modules ordered.
  Include the length of the required End Panels or Round End Assembly.
- Overall Countertop Length:
  We will include a .5" countertop overhang per side (1" total) as standard.
  If no overhang or a special length is required, please indicate that on the order.
  Special length overhangs may incur additional charges.
- For proper countertop specification, please specify the cabinet modules, including End Panels and Round End Assemblies, from left to right when placing your order.
- Please specify any options or accessories with each module ordered.

BACK TO CONTENTS

Integra™ Operatory Side Casework Countertop & Accessory Pricing

Part#	Description	Price
Laminate Countertops		
	Standard Colors per Inch (see below)	$17.90/in.
30900-00780	Drop-in Sink, Chrome Faucet, Soap Dispenser & Strainer Kit	518
31300-00366	Laminate Waste Bundle	136
Corian® Solid Surface Countertops		
	Standard Colors per Inch (see below)	$32.14/in.
30900-00782	Solid Surface Sink, White Faucet, Soap Dispenser & Strainer Kit	1,155
30900-00781 & 016-1097-00	Undermount Stainless Steel Sink, Matching Faucet, Soap Dispenser & Strainer Kit	1,155
31300-00368	Corian® Waste Bundle	123
Zodiaq® Quartz Countertops		
	Standard Colors per Inch (see below)	$39.66/in.
30900-00781 & 016-1097-00	Undermount Stainless Steel Sink, Matching Faucet, Soap Dispenser & Strainer Kit	1,155
31300-00368	Zodiaq® Waste Bundle	123

Ordering Notes

- Overall Cabinet Length:
  Add up the lengths specified with the modules ordered.
  Include the length of the required End Panels or Round End Assembly.
- Overall Countertop Length:
  We will include a .5" countertop overhang per side (1" total) as standard.
  If no overhang or a special length is required, please indicate that on the order.
  Special length overhangs may incur additional charges.

Cabinet Panel Colors
Bark, Crossfire Java, Dark Walnut, Fusion Maple, Golden Anigre, Harmony White, Honey Maple, Pebble Grey, Shark Grey, Shimmer, Summer Apple, Violin Figured Annigre and Wild Cherry

Laminate Countertop Colors
Antique Roca, Brazilian Brown Granite, Brazilian Topaz, Bronzed Fusion, Butterum Granite, Colorado Slate, Ebony Fusion, Green Tigris, Jamocha Granite, Kalahari Topaz, Mesa Sand, Milano Quartz, Mystique Marine, Mystique Mount, Oxide and Smoky Topaz

Corian® Solid Surface Countertop Colors
Antarctica, Arrowroot, Blue Pebble, Blue Spice, Canyon, Clove, Cottage Lane, Earth, Granola, Hazelnut, Jasmine, Lava Rock, Pine, Sandstone, Sonora and Tumbleweed

Zodiaq® Quartz Countertop Colors
Black Forest, Borealis Blue, Cappuccino, Caraway, Cloud White, Smoky Topaz, Space Black, Storm Grey and Toasted Almond

BACK TO CONTENTS

Integra™ Operatory Side Casework Cabinet Module Pricing Example

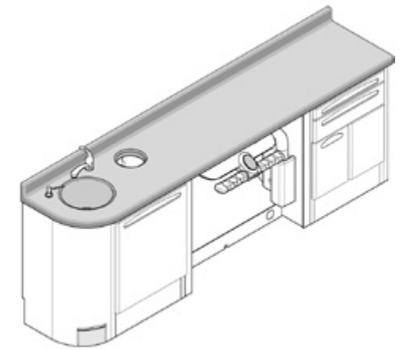

Part #	Description	Price
OSC030R-L	30" Rounded Sink Unit, Left Sink	$1,048
OSC036D	36" Side Delivery Unit	867
OSC024	24" Storage Unit	631

Door Storage Configuration

OSC-24-005	2", 4", Right Hinge Door	$242

Options

30900-00808	Side Panel w/ Procenter Delivery Mounting Holes	N/C
30900-00810	Right End Panel	$147

Countertop

	Standard Corian® Color (91.75 inches x $32.09 per inch)	$2,944.26

Sink

30900-00782	Solid Surface Sink, White Faucet, Soap Dispenser & Strainer	$1,155

Cabinet Panel Color

	Harmony White	Included

Instrument Delivery System

153678CM	Procenter Cabinet Mount System	$6,933

Total $13,967.26

BACK TO CONTENTS

Integra™ Operatory Side Casework 18" Sink Unit

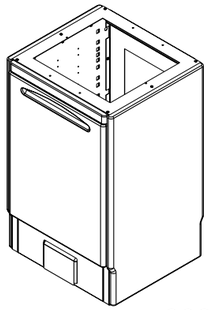

OSC018S

Starting Price: $957
(Starting price does not include countertop or sink bundle – see page 178 for pricing.)

Configuration Illustrated:

OSC018S	18" Sink Unit	$957
30300-01795	Full Door, Rt. Hinge	N/C
30900-00810	Right End Panel	147
Total Price		$1,104

Ordering Notes
- Specify cabinet panel color (See page 178)
- Specify countertop material and color (See page 178)
- Select Sink Bundle
- Select options

Options
OSC-NO TAP Delete Tapmaster® ..... -$330

End Panel Option
30900-00810 End Panel 147

Integra™ Operatory Side Casework 30" Sink Unit

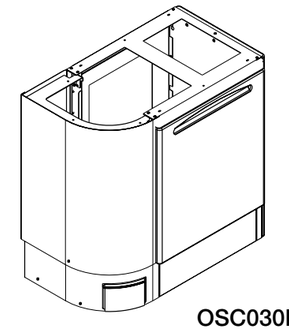

OSC030R-L

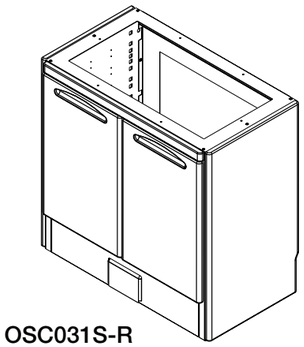

OSC031S-R

Starting Price: $1,048
(Starting price does not include countertop or sink bundle – see page 178 for pricing.)

Configuration Illustrated on Left:

OSC030R-L (Full door only)	30" Rounded Sink Unit - Sink Left	$1,048

Configuration Illustrated on Right:

OSC031S-R (Two doors only)	31" Squared Sink Unit - Sink Right	$1,048
30900-00810	Right End Panel	147
Total Price		$1,195

Ordering Notes
- Specify sink shape and sink end
  - o Rounded sink end – sink left (OSC030R-L)
  - o Rounded sink end – sink right (OSC030R-R)
  - o Squared sink end – sink left (OSC031S-L)
  - o Squared sink end – sink right (OSC031S-R)
- Specify cabinet panel color (See page 178)
- Specify countertop material and color (See page 178)
- Select sink bundle
- Select options

Options
OSC-NO TAP Delete Tapmaster® ..... -$330

End Panel Option
30900-00810 End Panel 147

Integra™ Operatory Side Casework 12" Storage or Waste Unit

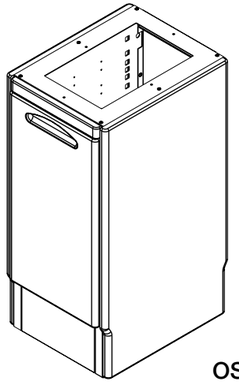

OSC012

Starting Price: $540
(Starting price does not include countertop or waste bundle – see page 178 for pricing.)

Configuration Illustrated:

OSC012	12" Unit	$540
30300-01793	Full Door, Rt. Hinge	N/C
30900-00810	Right End Panel	147
Total Price		$687

Ordering Notes
- Specify cabinet panel color (See page 178)
- Specify countertop material and color (See page 178)
- Select waste bundle (if applicable)
- Select options

Storage Options

30300-01799	CPU Vented Full Door; Right Hinge	N/C
30300-01800	CPU Vented Full Door; Left Hinge	N/C
30500-00377	Adjustable Shelf (3 maximum)	$30
30900-00801	CPU Fan (attached to CPU vented door)	169

End Panel Option

30900-00810	End Panel	147

Integra™ Operatory Side Casework 15" Storage Unit

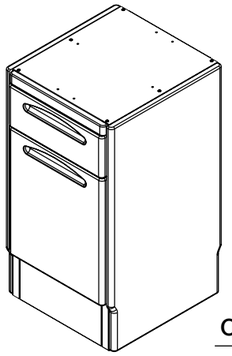

OSC015

Starting Price: $563
(Starting price does not include countertop – see page 178 for pricing.)

Configuration Illustrated:

OSC015	15" Storage Unit	$563
OSC-15-005	(1) 4" Drawer, RH Door	242
30900-00810	Right End Panel	147
Total Price		$952

Ordering Notes
- Specify cabinet panel color (See page 178)
- Specify countertop material and color (See page 178)
- Select storage configuration
- Select options

Storage Configurations

Part #	Description	Price
OSC-15-001	(2) 8" Drawers	$484
OSC-15-002	(2) 4", 8 " Drawers	484
OSC-15-003	(4) 4" Drawers	484
OSC-15-004	(1) 4" Drawer, Lt. Hinge Door	242
OSC-15-005	(1) 4" Drawer, Rt. Hinge Door	242

Storage Configurations

30300-01755	CPU Vented Full Door; Right Hinge	N/C
30300-01756	CPU Vented Full Door; Left Hinge	N/C
30500-00378	Adjustable Shelf (3 maximum)	$30
30500-00381	Pull-out Shelf	123
30900-00801	CPU Fan (attached to CPU vented door)	169

End Panel Option

30900-00810	End Panel	147

Integra™ Operatory Side Casework 18" Storage Unit

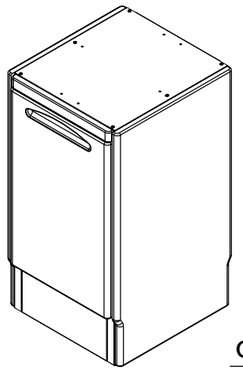

OSC018

Starting Price: $585
(Starting price does not include countertop – see page 178 for pricing.)

Configuration Illustrated:

OSC018	18" Storage Unit	$585
30300-01795	Full Door, Rt. Hinge	N/C
30900-00810	Right End Panel	147
Total Price		$732

Ordering Notes
- Specify cabinet panel color (See page 178)
- Specify countertop material and color (See page 178)
- Select storage configuration
- Select options

Storage Configurations

Part #	Description	Price
OSC-18-001	(2) 8" Drawers	$484
OSC-18-002	(2) 4", 8 " Drawers	484
OSC-18-003	(4) 4" Drawers	484
OSC-18-004	(1) 4" Drawer, Lt. Hinge Door	242
OSC-18-005	(1) 4" Drawer, Rt. Hinge Door	242

Storage Configurations

30300-01801	CPU Vented Full Door; Right Hinge	N/C
30300-01802	CPU Vented Full Door; Left Hinge	N/C
30500-00379	Adjustable Shelf (3 maximum)	$30
30500-00382	Pull-out Shelf	123
30900-00801	CPU Fan (attached to CPU vented door)	169

End Panel Option

30900-00810	End Panel	147

Integra™ Operatory Side Casework 24" Storage Unit

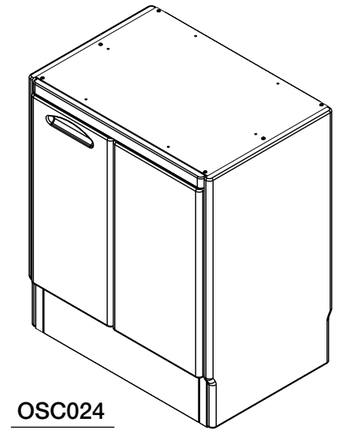

OSC024

Starting Price: $631
(Starting price does not include countertop – see page 178 for pricing.)

Configuration Illustrated:

OSC024	24" Storage Unit	$631
30300-01763	Bi-Fold Door, Rt. Hinge	N/C
30900-00810	Right End Panel	147
Total Price		$778

Ordering Notes
- Specify cabinet panel color (See page 178)
- Specify countertop material and color (See page 178)
- Select storage configuration
- Select options

Storage Configuration

Part#	Description	Price
OSC-24-001	(2) 2", 4", 8" Drawers	$484
OSC-24-002	(2) 2", (3) 4" Drawers	484
OSC-24-003	(4) 4" Drawers	484
OSC-24-004	(2) 4", 8" Drawers	484
OSC-24-005	2", 4" Drawers, Rt. Hand Bi-fold Door	242
OSC-24-006	2", 4" Drawers, Lt. Hand Bi-fold Door	242

Drawer Storage Options

30900-00701	Writing Surface (in lieu of 2" drawer)	N/C
30900-00807	Glove or Tissue Dispenser (in lieu of 4" drawer)	N/C

Door Storage Options

30300-01845	CPU Vented Full Door; Right Hinge	N/C
30300-01846	CPU Vented Full Door; Left Hinge	N/C
30500-00380	Adjustable Shelf	$30
30500-00354	Pull-out Shelf	123
30900-00856	Swing-out Shelf, Right Mounted	197
30900-00857	Swing-out Shelf, Left Mounted	197
30900-00858	Swing-out Tub, Right Mounted	197
30900-00859	Swing-out Tub, Left Mounted	197
30900-00801	CPU Fan (attached to CPU vented door)	169

End Panel Option

30900-00810	End Panel	147

Integra™ Operatory Side Casework
36" and 42" Side Delivery Unit

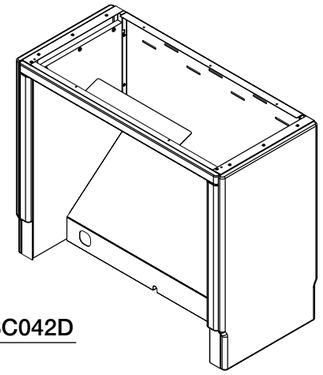

OSC042D

Starting Price:

OSC036D $867

OSC042D $900

(Price does not include countertop – see page 178 for pricing.)

Configuration Illustrated:

OSC042D	42" Storage Unit	$900
30900-00811	Right End Panel	147
Total Price		$1,047

Ordering Notes

- Specify cabinet panel color (See page 178)
- Specify countertop material and color (See page 178)
- Select storage configuration
- Select options

Options

30900-00808	Side Panel with Procenter Delivery Mounting Holes	N/C
30900-00809	Side Panel without Mounting Holes	N/C

End Panel Option

30900-00811	End Panel	$147

Integra™ Operatory Side Casework
Accessories - Upper Storage

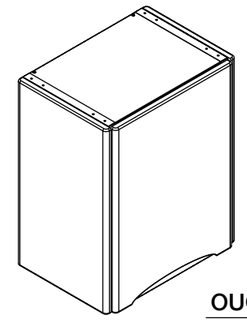

OUC015

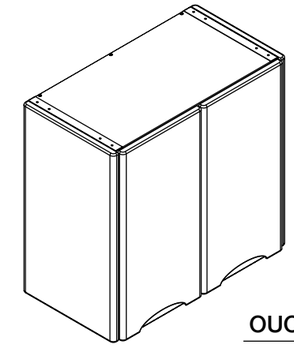

OUC024

Upper Storage Units: 12", 15" 18", 24" and 30"

Part#	Description	Price
OUC012	12" Upper Unit, Solid Single Door	$507
OUC015	15" Upper Unit, Solid Single Door	540
OUC018	18" Upper Unit, Solid Single Door	575
OUC024	24" Upper Unit, Solid Double Doors	647
OUC030	30" Upper Unit, Solid Double Doors	720

Options

OUC-NO RH END	No Right End Panel	-$45
OUC-NO LH END	No Left End Panel	-45
30500-00320	12" Additional Shelves	30
30500-00321	15" Additional Shelves	30
30500-00322	18" Additional Shelves	30
30500-00324	24" Additional Shelves	30
30500-00325	30" Additional Shelves	30
30300-01851	12" Unit Window Door, Right Hinge	57
30300-01852	12" Unit Window Door, Left Hinge	57
30300-01855	15" Unit Window Door, Right Hinge	57
30300-01856	15" Unit Window Door, Left Hinge	57
30300-01859	18" Unit Window Door, Right Hinge	57
30300-01860	18" Unit Window Door, Left Hinge	57

Note: 24" Units require two 12" window doors - right and left hinge. 30" Units require two 15" window doors – right and left hinge. Total price for both window doors will be $114.

OUC Dimensions

All upper storage cabinets are 24" in height and 13 5/16" in depth.

Ordering Notes

- Units will include two shelves
- Units will include left and right end panels
- Specify cabinet color (See page 178)
- Select options

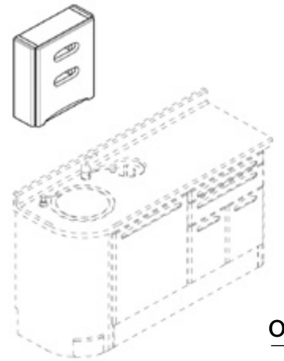

OUC019D

Glove/Towel/Cup Dispenser

Dimensions: 21.50" H x 18.75" W x 6.95" D

Part#	Description	Price
OUC019D	Glove/Towel/Cup Dispenser	$507

Options

30300-01861	Dispenser Door, Right Hinge	N/C
30300-01862	Dispenser Door, Left Hinge	N/C

Ordering Notes

- Specify right hinge door or left hinge door
- Specify cabinet panel color (See page 178)

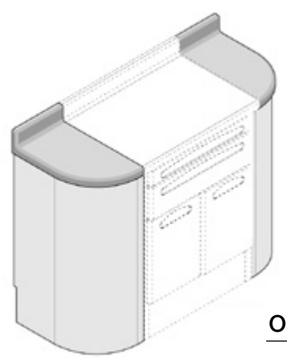

OSC010L

OSC010R

Round End Accessory

(Starting price does not include countertop – see page 178 for pricing.)

Part#	Description	Price
OSC010R	Round End Accessory, Right Side	$434
OSC010L	Round End Accessory, Left Side	434

Ordering Notes

- This accessory is to be attached to another cabinet module – the attached side will not accept a finish end panel
- Specify cabinet panel color (See page 178)

Front View

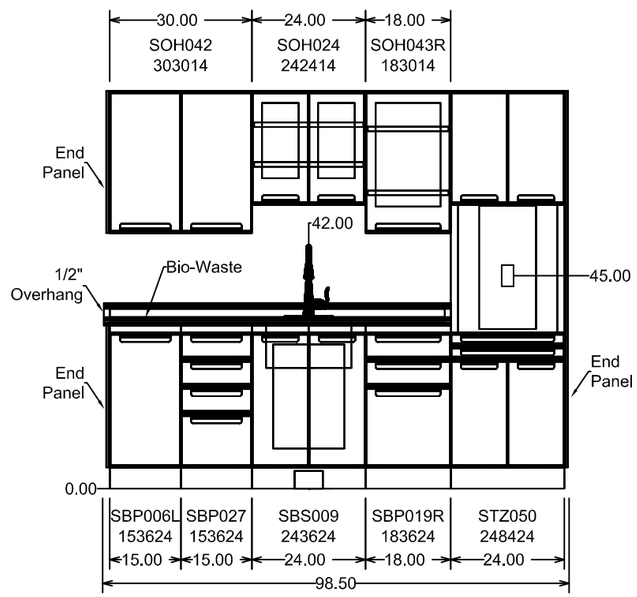

Side View

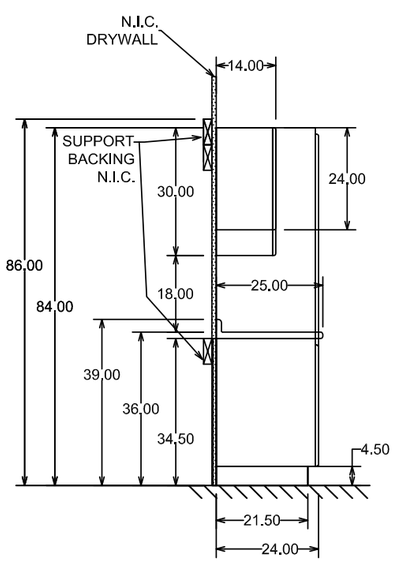

Note

- Overall length includes both end panels and 1/2" overhang on left end
- Cabinet length not including end panels and overhang is 8'-1/2"
- 0.00 mark starts at base of cabinet and does not include end panel or overhang
- Shown with pebble style door/drawer fronts

BACK TO CONTENTS

8' Steri-Center

Part #	Description	Price
STERI8L	8' Steri-Center with standard laminate top as illustrated	
Includes:		
DM-AWC001	4" Waste Chute w/ Lid	$286
MC-SBA005-013624	Base, End Panel, 36"H x 24"D	214
MC-SBS009-243624	Base, Sink, 2 Door with Tapmaster, 36H x 24W x 24D	1,568
MC-SBP006L-153624	Base, Storage, 1 Door, LH, 36H x 15W x 24D	886
MC-SBP019R-183624	Base, Storage, (2) 4" Drws, 1 Door, RH, 36H x 18W x 24D	1,217
MC-SBP027-153624	Base, Storage, (3) 4", (1) 8" Drws, 36H x 15W x 24D	1,388
CFT-8CHGSPULL-3	Faucet, Chrome Gooseneck Sprayer Lever Handle 1/3 Holes	879
MC-SOH043R-183014	Overhead, 1 Window Door, RH, 30H x 18W x 14D	852
MC-SOH024-242414	Overhead, 2 Window Doors, 24H x 24W x 14D	965
MC-SOH042-303014	Overhead, 2 Doors, 30H x 30W x 14D	911
MC-SOA014-013014	Overhead, End Panel, 30H x 14D	172
062-49xxx-xx	Side Splash, 23" Dual-sided Post Formed	67
CSK-S181411-3	Sink, Single Bowl, 3 Holes	1,102
MC-STA008-018424	Tall, End Panel, 84H x 24D	515
MC-STZ050-248424	Tall, 1 Pull-out Shelf, 1 Wrap Drw, 2 Doors, 84H x 24W x 24D	2,961
029-2468-01-000	Laminate Top, Postform w/ sink, RH, w/ grommet	672
		$14,655

STERI8C	8' Steri-Center with standard Corian® top as illustrated	
Includes:		
053-1080-01 4"	Waste Chute Lid	$147
MC-SBA005-013624	Base, End Panel, 36H x 24D	214
MC-SBS009-243624	Base, Sink, 2 Door w/ Tapmaster, 36H x 24W x 24D	1,568
MC-SBP006L-153624	Base, Storage, 1 Door, LH, 36H x 15W x 24D	886
MC-SBP019R-183624	Base, Storage, (2) 4" Drws, 1 Door, RH, 36H x 18W x 24D	1,217
MC-SBP027-153624	Base, Storage, (3) 4", (1) 8" Drws, 36H x 15W x 24D	1,388
CFT-8CHGSPULL-3	Faucet, Chrome Gooseneck Sprayer Lever Handle 1/3 Holes	879
MC-SOH043R-183014	Overhead, 1 Window Door, RH, 30H x 18W x 14D	852
MC-SOH024-242414	Overhead, 2 Window Doors, 24H x 24W x 14D	965
MC-SOH042-303014	Overhead, 2 Doors, 30H x 30W x 14D	911
MC-SOA014-013014	Overhead, End Panel, 30H x 14D	172
MC-STA008-018424	Tall, End Panel, 84H x 24D	515
MC-STZ050-248424	Tall, 1 Pull-out Shelf, 1 Wrap Drw, 2 Doors, 84H x 24W x 24D	2,961
029-2443-01-xxx	Corian® Top, RH Sink, (1) Waste Chute	4,172
029-2443-01=000	Corian Top 73.625", RH 804 Corian Sink, (1) Waste Chute, (1) 23" side Splash	4,131
		$16,847

8' Steri-Center Option:		
XC-SOA009-180114	18" Task Light, Hardwired (PG) w/14" Brkts	$386

BACK TO CONTENTS

Front View

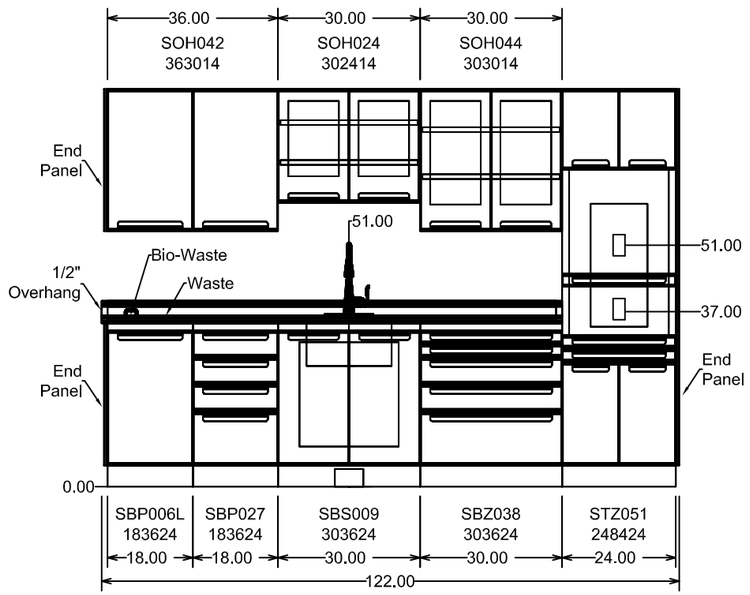

Side View

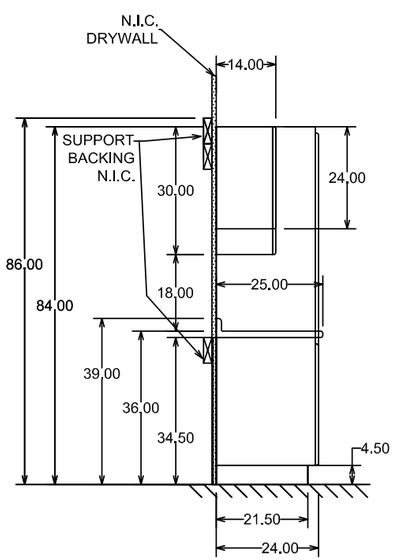

Note

- Overall length includes both end panels and 1/2" overhang on left end
- Cabinet length not including end panels and overhang is 10'-0"
- 0.00 mark starts at base of cabinet and does not include end panel or overhang
- Shown with woodgrain door/drawer fronts

BACK TO CONTENTS

10' Steri-Center

Part #	Description	Price
STERI10L	10' Steri-Center with standard laminate top as illustrated	
Includes:		
DM-AWC002	4" Waste Chute	$238
DM-AWC001	4" Waste Chute w/ Lid	286
MC-SBA005-013624	Base, End Panel, 36H x 24D	214
MC-SBS009-303624	Base, Sink, 2 Door w/ Tapmaster®, 36H x 30W x 24D	1,775
MC-SBZ038-303624	Base, Steri, 1 WS, 1 Wrap, (2) 4", (1) 8" Drws, 36H x 30W x 24D	2,220
MC-SBP006L-183624	Base, Storage, 1 Door, LH, 36H x 18W x 24D	955
MC-SBP027-183624	Base, Storage, (3) 4", (1) 8" Drws, 36H x 18W x 24D	1,474
CFT-8CHGSPULL-3	Faucet, Chrome Gooseneck Sprayer Lever Handle 1/3 Holes	879
MC-SOH042-363014	Overhead, 2 Doors, 30H x 36W x 14D	974
MC-SOH024-302414	Overhead, 2 Window Doors, 24H x 30W x 14D	1,097
MC-SOH044-303014	Overhead, 2 Window Doors, 30H x 30W x 14D	1,216
MC-SOA014-013014	Overhead, End Panel, 30H x 14D	172
062-49xxx-xx	Side Splash, 23" Dual-Sided Post Formed	67
CSK-S181411-3	Sink, Single Bowl, 3 Holes	1,102
MC-STA008-018424	Tall, End Panel, 84H x 24D	515
MC-STZ051-248424	Tall, 2 Pull-out Shelves, 1 Wrap, 2 Doors, 84H x 24W x 24D	3,365
029-2464-03-000	Laminate Top, sink, RH, w/ grommet	823
		$17,372

STERI10C	10' Steri-Center with standard Corian® top as illustrated	
Includes:		
053-1080-01	4" Waste Chute Lid	$147
MC-SBA005-013624	Base, End Panel, 36H x 24D	214
MC-SBS009-303624	Base, Sink, 2 Door w/ Tapmaster®, 36H x 30W x 24D	1,775
MC-SBZ038-303624	Base, Steri, 1 WS, 1 Wrap, (2) 4", (1) 8" Drws, 36H x 30W x 24D	2,220
MC-SBP006L-183624	Base, Storage, 1-Door, LH, 36H x 18W x 24D	955
MC-SBP027-183624	Base, Storage, (3) 4", (1) 8" Drws, 36H x 18W x 24D	$1,474
CFT-8CHGSPULL-3	Faucet, Chrome Gooseneck Sprayer Lever Handle 1/3 Holes	879
MC-SOH042-363014	Overhead, 2 Doors, 30H x 36W x 14D	974
MC-SOH024-302414	Overhead, 2 Window Doors, 24H x 30W x 14D	1,097
MC-SOH044-303014	Overhead, 2 Window Doors, 30H x 30W x 14D	1,216
MC-SOA014-013014	Overhead, End Panel, 30H x 14D	172
MC-STA008-018424	Tall, End Panel, 84H x 24D	515
MC-STZ051-248424	Tall, 2 Pull-out Shelves, 1 Wrap, 2 Doors, 84H x 24W x 24D	3,365
029-2438-01-xxx	Corian® Top, 97.25", RH 871 Corian Sink, (2) Waste Chutes, (1) 23" Side Splash	5,465
		$20,468

10' Steri-Center Option:		
XC-SOA009-180114	18" Task llght, Hardwired (PG) w/14" Brkts (maximum of 3)	$386

BACK TO CONTENTS

12' Steri-Center

Front View

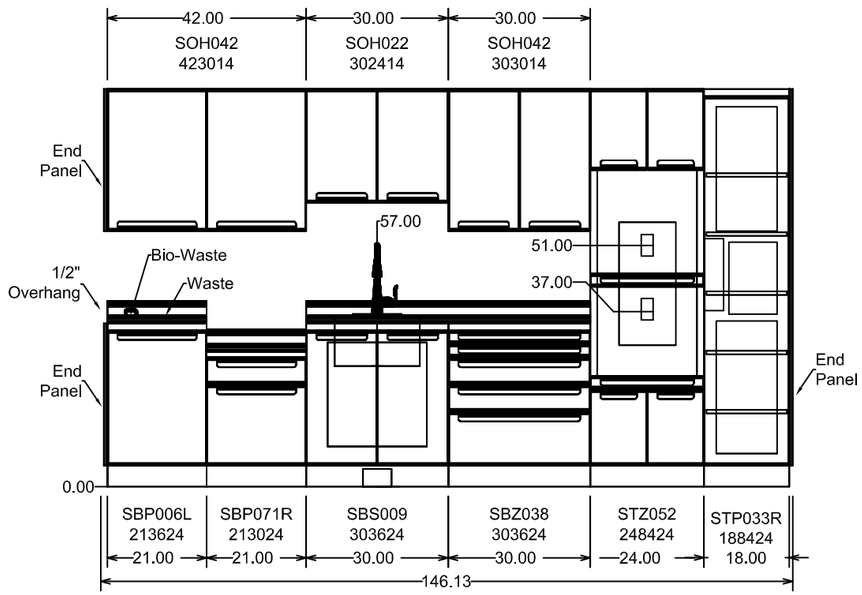

Side View

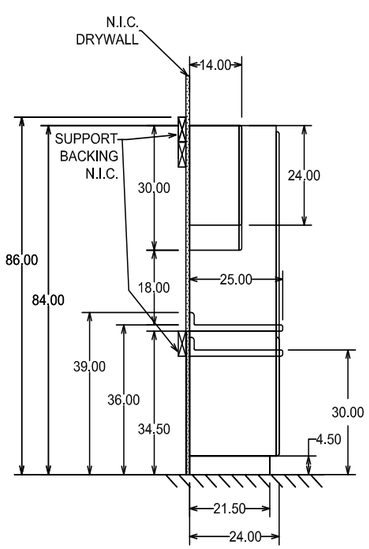

Note

- Overall length includes both end panels and 1/2" overhang on left side
- Cabinet length not including end panels and overhang is 12'-1/8"
- 0.00 mark starts at base of cabinet and does not include end panel or overhang
- Shown with woodgrain door/drawer fronts

BACK TO CONTENTS

12' Steri-Center

Part #	Description	Price
STERI12L	12' Steri-Center with standard laminate top as illustrated	
Includes:		
DM-AWC002	4" Waste Chute	$238
DM-AWC001	4" Waste Chute w/ Lid	286
MC-SBA005-013624	Base, End Panel, 36H x 24D	214
MC-SBS009-303624	Base, Sink, 2 Door w/ Tapmaster®, 36H x 30W x 24D	1,775
MC-SBZ038-303624	Base, Steri, 1 WS, 1 Wrap, (2) 4, (1) 8 Drws, 36H x 30W x 24D	2,220
MC-SBP006L-213624	Base, Storage, 1 Door, LH, 36H x 21W x 24D	1,020
MC-SBP071R-213024	Base, Storage, (1) 4 Drw, 1 Door, RH, 30H x 21W x 24D	1,132
CFT-8CHGSPULL-3	Faucet, Chrome Gooseneck Sprayer Lever Handle 1/3 Holes	879
MC-SOH022-302414	Overhead, 2 Doors, 24H x 30W x 14D	851
MC-SOH042-303014	Overhead, 2 Doors, 30H x 30W x 14D	911
MC-SOH042-423014	Overhead, 2 Doors, 30H x 42W x 14D	1,035
MC-SOA014-013014	Overhead, End Panel, 30H x 14D	172
062-49xxx-xx	Side Splash, 23" Dual-sided Post Formed	67
CSK-S181411-3	Sink, Single Bowl, 3 Holes	1,102
MC-STA008-018424	Tall, End Panel, 84H x 24D	515
MC-STZ052-248424	Tall, 2 Pull-out Shelves, 2 Doors, 84H x 24W x 24D	3,089
MC-STP033R-188424	Tall, Storage, 1 Window Door, RH, 84H x 18W x 24D	2,958
029-3902-00-000	Laminate Top, 21"	255
029-3915-00-000	Laminate Top, 22.75" w/ grommets	374
029-2466-00-000	Laminate Top, 60" w/ sink, LH	572
		$19,665

STERI12C	12' Steri-Center with standard Corian® top as illustrated	
Includes:		
053-1080-01	4" Waste Chute Lid	$147
MC-SBA005-013624	Base, End Panel, 36H x 24D	214
MC-SBS009-303624	Base, Sink, 2 Door w/ Tapmaster®, 36H x 30W x 24D	1,775
MC-SBZ038-303624	Base, Steri, 1 WS, 1 Wrap, (2) 4, (1) 8 Drws, 36H x 30W x 24D	2,220
MC-SBP006L-213624	Base, Storage, 1 Door, LH, 36H x 21W x 24D	1,020
MC-SBP071R-213024	Base, Storage, (1) 4 Drw, 1 Door, RH, 30H x 21W x 24D	1,132
CFT-8CHGSPULL-3	Faucet, Chrome Gooseneck Sprayer Lever Handle 1/3 Hole	879
MC-SOH022-302414	Overhead, 2 Doors, 24H x 30W x 14D	851
MC-SOH042-303014	Overhead, 2 Doors, 30H x 30W x 14D	911
MC-SOH042-423014	Overhead, 2 Doors, 30H x 42W x 14D	1,035
MC-SOA014-013014	Overhead, End Panel, 30H x 14D	172
MC-STA008-018424	Tall, End Panel, 84H x 24D	515
MC-STZ052-248424	Tall, 2 Pull-out Shelves, 2-Doors, 84H x 24W x 24D	3,089
MC-STP033R-188424	Tall, Storage, 1 Window Door, RH, 84H x 18W x 24D	2,958
029-4022-00-xxx	Corian® Top, 21"	734
029-2440-00-xxx	Corian® Top, LH Sink, 60", 871 corian Sink, (1) 23" Side Splash	3,139
029-4023-01-xxx	Corian® Top, (2) Waste Chutes, 22.75"	1,593
		$22,384

12' Steri-Center Options:		
XC-SOA009-180114	18" Hardwired Task Light (maximum of 2)	$386
XC-SOA009-360114	36" Hardwired Task Light (maximum of 1)	386

BACK TO CONTENTS

Treatment Stations

TS3670 Compact Treatment Station with Slide-out L/R Work Surface 202-206
TS4370 Treatment Station with Slide-out L/R Work Surface.....202-206
TS4375 Treatment Station with Slide-out L/R Work Surface and CPU Side Storage.....202-206
TS3680 Compact Treatment Station with Pivoting L/R Work Surface.....207-211
TS4380 Treatment station with Pivoting L/R Work Surface.....207-211
TS4385 Treatment Station with Pivoting L/R Work Surface and CPU Side Storage 207-211
TS3690 Slimline/Compact Treatment Station with Pivoting Work Surface 207-211
TS4390 Slimline Treatment Station with Pivoting Work Surface.....207-211
Expanding the Treatment Station (adding modules).....212

Echelon Consoles

ECS9610 Echelon Console with Slide-out Work Surface.....213-216

Central Stations

CS109 Standard Height Central Station 218-224
CS109-TB Tall Boy Central Station.....218-224

Side Stations

SS5800 Side Station with Drawer Module and Angled Shelf Module 226
WHSS5800 Wall Hung Side Station with Drawer Module and Angled Shelf Storage 227
SS5810 Side Station with Angled Sink Base and Drawer Module 228
WHSS5810 Wall Hung Side Station with Angled Sink Base and Drawer Module.....229
SS6310 Side Station with Angled Sink Base, Drawer Module and Angled Storage 230
SS7200 Side Station with Angled CPU Storage, Drawer Module and Sink Base.....231
SS7210 Side Station with Angled Sink Base, Drawer Storage and CPU Storage.....232
SS6210 Side Station with Angled Sink Base and Desk/Side Delivery.....233
SS7300 Side Station with Angled Shelf Storage, Desk/Side Delivery and Sink Base.....234

Artizan® Expressions Contents

Ortho

OC2421 Ortho Cabinet 236
OC2429 Ortho Cabinet with CPU Storage 237

Streamline – Center

Sterilization Center Overview 238
SC144-200 Freestanding 12' Sterilization Center 239
SC120-200 Freestanding 10' Sterilization Center 240
SC96-200 Freestanding 8' Sterilization Center 241

Custom Modular Cabinets

Sterilization Modules.....243-244
Operatory Modules.....245
Mobile Cabinets. 246
X-Ray Pass Through Insert.....247

Dimensions

Treatment Station 271
Echelon Console and Central Station 272
Side Station.....273
Pedo Bench and Ortho Delivery Cabinet 274

Artizan® Expressions Colors

Below is a listing of the Artizan® Expressions standard colors for countertops, cabinet panels, upholstery and optional resin panels.

Countertops		
Standard Corian® Solid Surface Options	**Standard Laminate Options**	**Standard Zodiaq® Quartz Options**
Antarctica	Antique Roca	Black Forest
Arrowroot	Brazilian Brown Granite	Borealis Blue
Blue Pebble	Brazilian Topaz	Cappuccino
Blue Spice	Bronzed Fusion	Caraway
Canyon	Butterum Granite	Cloud White
Clove	Colorado Slate	Smokey Topaz
Cottage Lane	Ebony Fusion	Space Black
Earth	Green Tigris	Storm Grey
Granola	Jamocha Granite	Toasted Almond
Hazelnut	Kalahari Topaz	
Jasmine	Mesa Sand	
Lava Rock	Milano Quartz	
Pine	Mystique Marine	
Sandstone	Mystique Mount	
Sonora	Oxide	
Tumbleweed	Smoky Topaz	
Panel Colors (Wilsonart® & Formica®)		
Designer White	Asian Sand	High Line
Loft Oak	Fusion Maple	Cognac Maple
Oiled Olivewood	Macchiato Walnut	Wild Cherry
Williamsburg Cherry	Mambo	Shaker Cherry
Satin Stainless	Cosmic Strandz	Skyline Walnut
Espresso Pear	Xanadu	Cocobala
Cafelle	Black	
Upholstery (Ultraleather™)		
Artic	Milkweed	Abalone (pearlized)
Silk	Cashmere	Mica (pearlized)
Papyrus	Pewter (pearlized)	Hide
Fudge	Lemon	Bamboo
Parrot	Eucalyptus	Cyan
Bayou	Hot Sauce	Apricot
Mandarin	Grenadine	Sorbet
Plum	Nile	Admiral
Midnight (pearlized)	Lake (pearlized)	Riviera
Silver Pearl	Charcoal	Raven Wing
Resin Panels (Lumicor®)		
Chiroroot White	Airlie	White Interlock
Kauri	Meadow	Whitehaven
Natural Leaves	Ivory Taipei	Natura Ginger
Stone Linen	Arana Pinto	Amate Pinto
Ginkgo	Copper Solaris	Jade Solaris
Coastal Light	Seaweed	Arana Coco
Nido		

Notes

TS4380 Shown

Pricing Example

Part #	Description	Price
TS4380	43" Width, Pivoting Left/Right Worksurface	$8,079

Base Zone

B1 – Base Module		
	Front Storage:	
	(1) Equip., (2) 4", (1) 6" Drawers (TS-310)	$188
B2 – Center Base Module		
	Procenter Chassis Control Provisions (TS-560)	Included
B3 – Base Module		
	Side Storage:	
	(1) Two-way Shelf, (2) Slide-out Tubs (TS-400)	$183

Middle Zone

M1 – Midsection		
	Suspended Glass Shelf (TS-700)	Included
T1 – Task Light		
	Stainless Steel Valance with Clock-timer & LED Task Light	Included

Upper Zone

U1 – Upper Front Storage		
	HL Manual Lift-up Door (029-5348-03)	Included
U2 – Upper Back		
	Pass-thru – (2) wood shelf/comp. std. (TS-110)	$202
	Solid back - (2) wood shelves/comp. std. (TS-100).	Included

Countertop Section

	Standard Midmark Corian®	Included

Cabinet Panel Color

	Standard Midmark Cabinet Panel Selection (Bottom)	Included
	Standard Midmark Cabinet Panel Selection (Upper)	Included

Instrument Delivery System

153659-002	Pivoting Worksurface and Assistant's Unit	$3,089

TOTAL $11,741

Starting Price (Includes Slide-Out Worksurface):

TS3670	36" Width, Sliding Left/Right Worksurface	$8,623
TS4370	43" Width, Sliding Left/Right Worksurface	$9,265
TS4375	43" Width, Sliding Left/Right Worksurface, Back Base CPU Compartment	$9,804

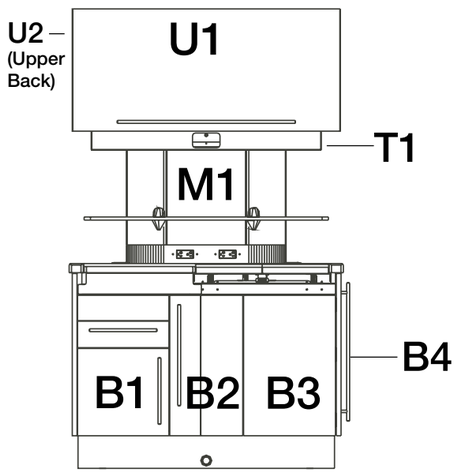

TS4370

70 series recommended room dept = 11' 6"
75 series recommended room dept = 12' 0"

Starting price includes the following:

B1 – Base Module (TS300)
- Equipment Drawer, Door w/ Adj. Shelf

B2 – Center Base Module (TS500)
- Nitrous/CPU Storage

B3 – Base Module (TS405)
- Side Storage with Two Adjustable Shelves

B4 – CPU Module (75 Series Only)
- Includes CPU Cooling Fan

M1 – Midsection (TS700)
- Floating Frosted Glass Shelf

T1 –Task Light
- Stainless Steel Valance with Clock-Timer & LED Task Light

U1 – Upper Front Storage
- Single Door Panel with Manual HL Lift System

U2 – Upper Back
- Non-Pass Through

Electrical
- LED task light with sensor (on assistant side), 2-outlets in module B1, 2-outlets in module B3/B4, 2-outlets on top of countertop (1-outlet for 36" wide cabinets)

ZONE OPTIONS

Midmark Procenter Instrument Delivery System

___153659-008 Assistant's Instruments and Procenter Delivery System for Slide-out Work Surface **$5,086**

___153659-009 Assistant's Instruments for Slide-out Work Surface **$2,379**

Options

Part #	Description	Price
153607	Add or Delete Handpiece Position	+/- 400
029-2808-00	Second Syringe (Procenter Delivery Unit)	170
153630-004	Handpiece Illumination System	514
029-2853-01	Tubing and Lamp for Fiber Optic Handpiece	290
029-2853-00	Tubing for ISO-C Fiber Optic Handpiece	225
153668-002	Chair Control, Dentist's Instruments, Ultra Chair	308
153668-003	Chair Control, Assistant's Instruments, Ultra Chair	308
153668-004	Chair Control, Dentist's Instruments, Elevance Chair	308
153688-005	Chair Control, Assistant's Instruments, Elevance Chair	308
029-2809-00	Heated Dentist's Syringe**	321
152956-01	Second HVE for Assistant's Instruments	132

*** (Requires Power Supply)*

BACK TO CONTENTS

Artizan® Expressions Sliding Worksurface Treatment Stations

ZONE OPTIONS

B1 & B3 Base Modules

Front Storage

Eq. Drawer & Adj. Shelf	(2) Drawer & Adj. Shelf	Eq. Drawer & (3) Drawers	(4) Drawers	Eq. Drawer & (2) Drawers	(1) Drawer, Eq. (2) Drawers	Glove Drawer, (2) Drawers
TS-300	TS-305	TS-310	TS-350	TS-360	Not Avail for 90 Series	Not Avail for 36" Wide Cabinet
(Included)	**$96**	**$188**	**$188**	**$96**	TS-370	TS-380
TS-300SS	TS-305SS	TS-310SS	TS-350SS	TS-360SS	**$188**	**$188**
$43	**$137**	**$275**	**$275**	**$137**	TS-370SS	TS-380SS
					$275	**$275**

Side Storage

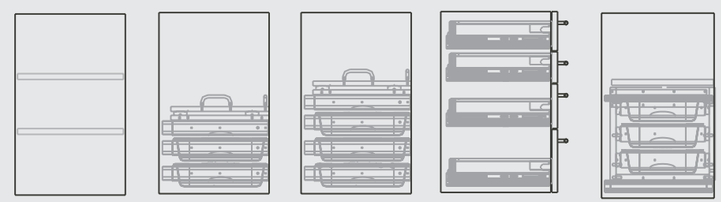

(2) Adj. Shelves	2-Way Shelf/ (2) Tubs	2-Way Shelf/ (3) Tubs	Side Drawers	Side Kick (Manual Open/Close)	Airglide Opener System
TS-405	TS-400	TS-410	TS-420	Not Avail for 75, 85, and 90 Series	PN-1000
(Included)	**$183**	**$287**	**$188**	TS-445	**$562**
			TS-420SS	**$367**	
			$275		

B2 – Center Base Module

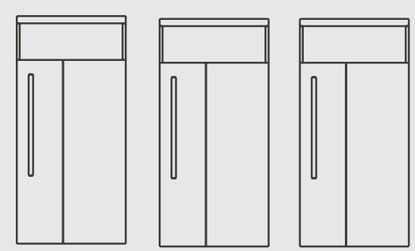

Nitrous/CPU Storage	(2) Adj. Shelves	Control Tray Provisions
TS-500	TS-520	TS-560
(Included)	**$38**	**(Included)**

B4 – Base Module

This is the module behind the side access module. For 75 series, a CPU fan and grommets are included in starting price and cannot be deducted.

BACK TO CONTENTS

M1 – Midsection

Accepts Monitor Mount(s):
029-5255-00

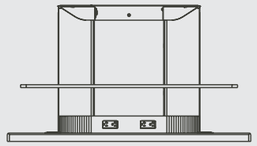

Floating Glass Shelf
TS-700 **(Included)**

Accepts Monitor Mount(s):
029-5255-00, 029-5185-00,
029-5186-00, 029-5179-00

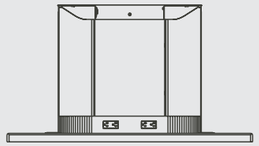

Open Midsection
TS-750 **(Included)**

Option

Midsection privacy extensions may be added to any of the midsection offerings

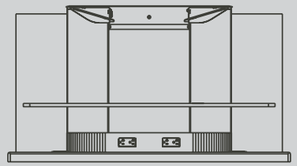

Privacy Extension Option
TS-795 **$52**

Accepts Monitor Mount(s):
029-5255-00

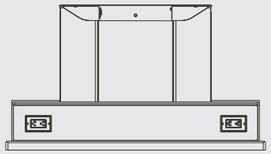

Shelf & Equipment Panel - 6" Box HGT
TS-760 **$112**

Accepts Monitor Mount(s):
029-5255-00

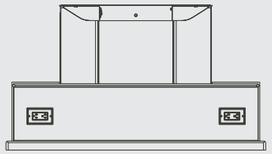

Shelf & Equipment Panel - 9" Box HGT
TS-765 **$112**

Note: On 36" wide models, TS-700 and TS-750 will only include a single duplex outlet. 43" wide models shown above.

T1 – Task Light and U1 &U2 – Upper Storage

Note: Task light area includes stainless steel valance, LED task light (may be deducted) and clock timer. Upper storage comes standard with two wood shelves/compartment. Glass shelf upgrade available: $62 per set of 2.

36" Wide Models

43" Wide Models

Single Lift-up Front Door/Solid Back Panel TS-100 **Included**
Single Lift-up Front Door/Pass-Thru Doors TS-110 **$202**
HL Lift System (straight up) 029-5348-03 OR
HS Lift System (up & over) 029-5323-02 **Included**

36" Wide Models

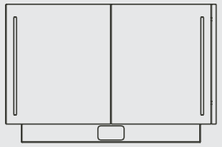

43" Wide Models

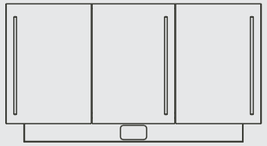

Front Doors/Solid Back Panel TS-130 **-$135**
Front Doors/Pass-Thru Doors TS-135 **-$86**

36" Wide Models
Open Top CPU Storage

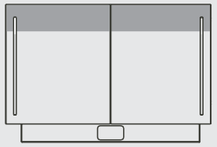

43" Wide Models
Open Top CPU Storage

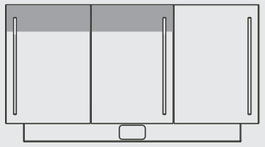

Upper CPU Storage
Front Doors/Solid Back Panel TS-105 **$83**
Front Doors/Pass Thru Doors TS-115 **$285**

Resin Upgrade - Front
TS-230 **$416**

Resin Upgrade - Back
TS-235 **$416**

Note: Expect orders with resin to be on a 6-8 week lead time vs. a typical 4 week lead time.

BACK TO CONTENTS

Artizan® Expressions Sliding Worksurface Treatment Stations

ZONE OPTIONS

U1 & U2 – Upper Storage (Cont.)

36" Wide Models

43" Wide Models

Valance Cap
TS-120 **-$380**

36" Wide Models

43" Wide Models

Glove Valance Cap
TS-125 **-$133**

Options and Accessories

USB Hub

4 Port USB Hub

002-1174-00
Includes 4 ft. cable and power supply.
$117

Color Options

TS-650 Upper OR Lower Non-Standard Color **$190**
TS-655 Upper AND Lower Non-Standard Color **$382**
TSS36-620 36" W Laminate CT Deduction **-$523**
TSS43-620 43" W Laminate CT Deduction **-$703**
Zodiaq® Countertop Upgrade - **Call for pricing.**

Important Note: Non-standard pricing is based on the manufacturer's standard colors and finishes. All others must be quoted by our customer service department.

Computer Mounts & Accessories

Arm Mount **$487**
029-5186-00

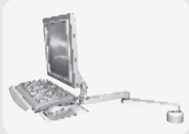

Arm Mount with Tray **$733**
029-5185-00

Pivoting Mount **$217**
029-5179-00

Sliding Track Monitor Mount
029-5255-00 **$929**
Field Install Kit
002-1410-01 **$929**

CABLES & MONITOR SOLD SEPARATELY
015-2771-00 High Voltage Harness **$164**
015-2775-00 Low Voltage Harness **$218**
002-1125-00 17" Exorvision Monitor **$1,827**

Additional Items

TS43-800 43" Wide Lower Only **-$1,520**
TS36-800 36" Wide Lower Only **-$1,330**
TS-910 Bi-fold Door on Side Access Modulen **$63**
EL-912 Task Lighting Deduction **-$114**
015-2651-00 USB Driven CPU Cooling Fan **$164**
016-1407-00 Frosted Glass Drawer Inserts (Large Drawers) **$98**

Note: These part numbers and pricing are for ordering a complete Sliding Worksurface Treatment Station. If reconfiguration is requested or parts are needs, please contact Customer Experience for service part numbers and pricing.

BACK TO CONTENTS

Artizan® Expressions Sliding Worksurface Treatment Stations ORDER FORM

Copy-Complete-Send

Starting Price

☐ TS3670 Treatment Station	$8,623
☐ TS4370 Treatment Station	$9,265
☐ TS4375 Treatment Station	$9,804

Midmark Procenter Delivery

☐ 153659-008 Asst's Instruments & Procenter	$5,086
☐ 153659-009 Asst's Instruments	$2,379

B1 & B3 Base Modules Front Storage

☐ TS-300 Eq. Drawer & Adj. Shelf	Included
☐ TS-300SS Eq. Drawer & Adj. Shelf	$43
☐ TS-305 (2) Drawer & Adj. Shelf	$96
☐ TS-305SS (2) Drawer & Adj. Shelf	$137
☐ TS-310 Eq. Drawer & (3) Drawers	$188
☐ TS-310SS Eq. Drawer & (3) Drawers	$275
☐ TS-350 (4) Drawers	$188
☐ TS-350SS (4) Drawers	$275
☐ TS-360 Eq. Drawer & (2) Drawers	$96
☐ TS-360SS Eq. Drawer & (2) Drawers	$137
☐ TS-370 (1) Drawer, Eq., (2) Drawers	$188
☐ TS-370SS (1) Drawer, Eq., (2) Drawers	$275
☐ TS-380 Glove Drawer, (2) Drawers	$188
☐ TS-380SS Glove Drawer, (2) Drawers	$275

Side Storage

☐ TS-405 Adj. Shelves	Included
☐ TS-400 2-Way Shelf, (2) Tubs	$183
☐ TS-410 2-Way Shelf, (3) Tubs	$287
☐ TS-420 Side Drawers	$188
☐ TS-420SS Side Drawers	$275
☐ TS-445 Side Kick 2-Way Shelf, (2) Tub	$367
☐ PN-1000 Airglide® Opening Systems	$562

B2 – Center Base Module

☐ TS-500 Nitrous/CPU Storage	Included
☐ TS-520 (2) Adj. Shelves	$38
☐ TS-560 Control Tray Provisions	Included

M1 – Midsection

☐ TS-700 Floating Glass Shelf	Included
☐ TS-750 Open Midsection	Included
☐ TS-760 6" Accessory Panel	$112
☐ TS-765 9" Accessory Panel	$112
☐ TS-795 Privacy Panel Option	$52

U1 & U2 – Upper Storage

☐ TS-100 Single Lift-Up Door/Solid Back	Included
☐ TS-110 Single Lift-Up Door/Pass-Thru	$202
☐ 029-5348-03 HL System (Straight Up) OR 029-5323-02 HS System (Up & Over)	Included

U1 & U2 – Upper Storage

☐ TS-130 Doors/Solid Back	-$135
☐ TS-135 Doors/ Pass-Thru	-$86
☐ TS-105 Doors & CPU Storage/Solid Back	$83
☐ TS-115 Doors & CPU Storage/Pass-thru	$285
☐ TS-230 Resin Panel Upgrade – Front	$416
☐ TS-235 Resin Panel Upgrade – Back	$416
☐ TS-120 Valance Cap	-$380
☐ TS-125 Glove Valance Cap	-$133

Computer Options

☐ 029-5185-00 Double Arm Mount/Keyboard	$733
☐ 029-5186-00 Double Arm Mount	$487
☐ 029-5179-00 Pivoting Mount	$217
☐ 029-5255-00 Sliding Track Mount	$929
☐ 015-2771-00 High Voltage Harness	$164
☐ 015-2775-00 Low Voltage Harness	$218
☐ 002-1125-00 17" Excorvision Monitor	$1,827

Color Options

☐ TS-650 Upper OR Lower Non-Standard Color	$190
☐ TS-655 Upper AND Lower Non-Standard Color	$382
☐ TSS36-620 36" W Laminate CT Deduction	-$523
☐ TSS43-620 43" W Laminate CT Deduction	-$703
☐ Zodiaq CT Upgrade	Call for Pricing

Additional Items

☐ TS36-800 36" W Lower Only	-$1,330
☐ TS43-800 43" W Lower Only	-$1,520
☐ TS-910 Bi-Fold Door-Side Access Module	$63
☐ EL-912 Task Light Deduction	-$114
☐ 015-2651-00 USB Driven CPU Cooling Fan	$164
☐ 016-1407-00 Frosted Glass Drawer Inserts	$98

UPPER CABINET COLOR _____

LOWER CABINET COLOR _____

RESIN (OPTIONAL) COLOR _____

COUNTERTOP COLOR _____

CABINET UPHOLSTERY _____

Total $ _____ x (qty) = _____

DENTIST NAME _____ ☐ RIGHT HAND ☐ LEFT HAND

SIGNATURE _____

DEALER _____ CITY _____

CONTACT _____

BACK TO CONTENTS

Artizan® Expressions Pivoting Worksurface Treatment Stations

Starting Price (Does Not Include Pivoting Worksurface):

TS3680	36" Width, Pivoting Left/Right Worksurface	$7,286
TS4380	43" Width, Pivoting Left/Right Worksurface	$8,079
TS4385	43" Width, Pivoting Left/Right Worksurface, Back Base CPU Compartment	$8,598
TS3690	36" Width, Slim 17 5/8" Depth, Pivoting Left/Right Worksurface	$6,767
TS4390	43" Width, Slim 17 5/8" Depth, Pivoting Left/Right Worksurface	$7,546

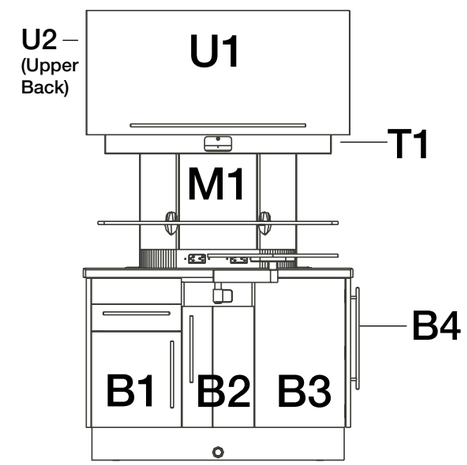

TS4380

80 Series recommended room depth = 11' 6"
85 Series recommended room depth = 12' 0"
90 Series recommended room depth = 10' 6"

Starting price includes the following:

B1 – B1 – Base Module (TS300)
- Equipment Drawer, Door w/ Adj. Shelf

B2 – Center Base Module (TS500)
- Nitrous/CPU Storage

B3 – Base Module (TS405)
- Side Storage with Two Adjustable Shelves

B4 – CPU Module (85 Series Only)
- Includes CPU Cooling Fan

M1 – Midsection (TS700)
- Floating Frosted Glass Shelf

T1 –Task Light
- Stainless Steel Valance with Clock-Timer & LED Task Light

U1 –Upper Front Storage (029-5348-03)
- Single Door Panel with Manual HL Lift System

U2 – Upper Back (TS100)
- Non-Pass Through

Electrical
- LED task light with sensor (on assistant side), 2-outlets in module B1, 2-outlets in module B3/B4, 2-outlets on top of countertop (1-outlet for 36" wide cabinets)

ZONE OPTIONS

Midmark Procenter Instrument Delivery System

___153659-003 Pivoting Work Surface Only **$1,608**

___153659-004 Pivoting Work Surface and Assistant's Instruments **$3,089**

___153659-002 Pivoting Work Surface, Assistant's Instruments and Procenter Delivery System **$5,782**

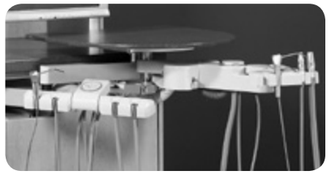

Options

Part #	Description	Price
153607	Add or Delete Handpiece Position	+/- 400
029-2808-00	Second Syringe (Procenter Delivery Unit)	170
153630-004	Handpiece Illumination System	514
029-2853-01	Tubing and Lamp for Fiber Optic Handpiece	290
029-2853-00	Tubing for ISO-C Fiber Optic Handpiece	225
LAMDED	Laminate Work Surface Deduction for pivoting work surface	(-350)
QUPGRADE	Zodiaq® Work Surface Upgrade for pivoting work surface	211
153668-002	Chair Control, Dentist's Instruments, Ultra Chair	308
153668-003	Chair Control, Assistant's Instruments, Ultra Chair	308
153668-004	Chair Control, Dentist's Instruments, Elevance Chair	308
153688-005	Chair Control, Assistant's Instruments, Elevance Chair	308
029-2809-00	Heated Dentist's Syringe**	321
152956-01	Second HVE for Assistant's Instruments	132

*** (Requires Power Supply)*

BACK TO CONTENTS

ZONE OPTIONS

B1 & B3 Base Modules

Front Storage

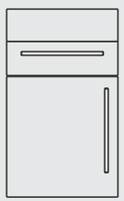
Eq. Drawer & Adj. Shelf
TS-300
(Included)
TS-300SS
$43

(2) Drawer & Adj. Shelf
TS-305
$96
TS-305SS
$137

Eq. Drawer & (3) Drawers
TS-310
$188
TS-310SS
$275

(4) Drawers
TS-350
$188
TS-350SS
$275

Eq. Drawer & (2) Drawers
TS-360
$96
TS-360SS
$137

(1) Drawer, Eq. (2) Drawers
Not Avail for 90 Series
TS-370
$188
TS-370SS
$275

Glove Drawer, (2) Drawers
Not Avail for 36" Wide Cabinet
TS-380
$188
TS-380SS
$275

Side Storage

(2) Adj. Shelves
TS-405
(Included)

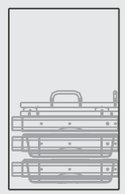
2-Way Shelf/ (2) Tubs
TS-400
$183

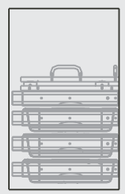
2-Way Shelf/ (3) Tubs
TS-410
$287

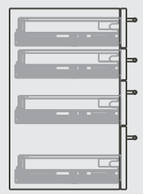
Side Drawers
TS-420
$188
TS-420SS
$275

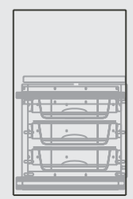
Side Kick (Manual Open/Close)
Not Avail for 75, 85, and 90 Series
TS-445
$367

Airglide Opener System
PN-1000
$562

B2 – Center Base Module

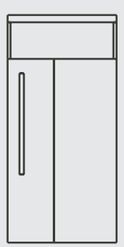
Nitrous/CPU Storage
TS-500
(Included)

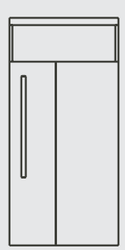
(2) Adj. Shelves
TS-520
$38

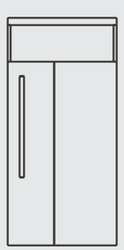
Control Tray Provisions
TS-560
(Included)

B4 – Base Module

This is the module behind the side access module. For 85 series, a CPU fan and grommets are included in starting price and cannot be deducted.

Artizan® Expressions Pivoting Worksurface Treatment Stations

M1 – Midsection

Accepts Monitor Mount(s): 029-5255-00

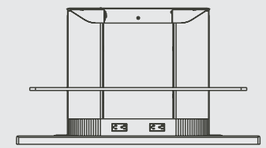
Floating Glass Shelf
TS-700 **(Included)**

Accepts Monitor Mount(s): 029-5255-00, 029-5185-00, 029-5186-00, 029-5179-00

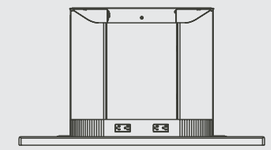
Open Midsection
TS-750 **(Included)**

Option

Midsection privacy extensions may be added to any of the midsection offerings

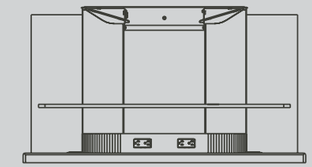
Privacy Extension Option
TS-795 **$52**

Accepts Monitor Mount(s): 029-5255-00

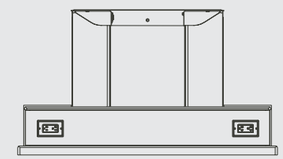
Shelf & Equipment Panel - 6" Box HGT
TS-760 **$112**

Accepts Monitor Mount(s): 029-5255-00

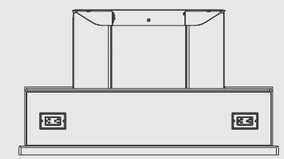
Shelf & Equipment Panel - 9" Box HGT
TS-765 **$112**

Note: On 36" wide models, TS-700 and TS-750 will only include a single duplex outlet. 43" wide models shown above.

T1 – Task Light and U1 &U2 – Upper Storage

Note: Task light area includes stainless steel valance, LED task light (may be deducted) and clock timer. Upper storage comes standard with two wood shelves/compartment. Glass shelf upgrade available: $60 per set of 2.

36" Wide Models

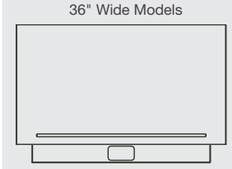

43" Wide Models

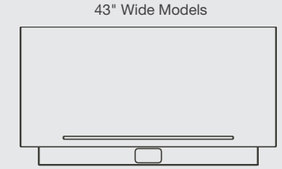

Single Lift-up Front Door/Solid Back Panel TS-100 **Included**
Single Lift-up Front Door/Pass-Thru Doors TS-110 **$202**
HL Lift System (straight up) 029-5348-03 OR
HS Lift System (up & over) 029-5323-02 **Included**

36" Wide Models

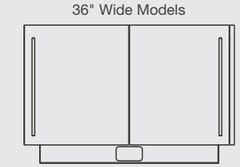

43" Wide Models

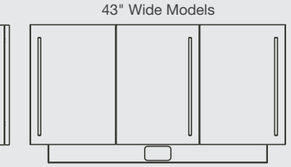

Front Doors/Solid Back Panel TS-130 **-$135**
Front Doors/Pass-Thru Doors TS-135 **-$86**

36" Wide Models Open Top CPU Storage

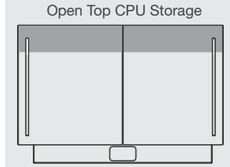

43" Wide Models Open Top CPU Storage

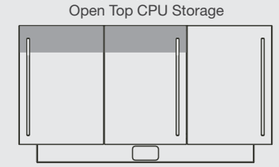

Upper CPU Storage
Front Doors/Solid Back Panel TS-105 **$83**
Front Doors/Pass Thru Doors TS-115 **$285**

Resin Upgrade - Front
TS-230 **$416**

Resin Upgrade - Back
TS-235 **$416**

Note: Expect orders with resin to be on a 6-8 week lead time vs. a typical 4 week lead time.

Artizan® Expressions Pivoting Worksurface Treatment Stations

ZONE OPTIONS

U1 & U2 – Upper Storage (Cont.)

36" Wide Models

43" Wide Models

Valance Cap
TS-120 -**$380**

36" Wide Models

43" Wide Models

Glove Valance Cap
TS-125 **-$133**

Options and Accessories

USB Hub

4 Port USB Hub

002-1174-00
Includes 4 ft. cable and power supply.
$117

Color Options

TS-650 Upper OR Lower Non-Standard Color **$190**
TS-655 Upper AND Lower Non-Standard Color **$382**
TSS36-620 36" W Laminate CT Deduction **-$523**
TSS43-620 43" W Laminate CT Deduction **-$703**
Zodiaq® Countertop Upgrade - **Call for pricing.**

Important Note: Non-standard pricing is based on the manufacturer's standard colors and finishes. All others must be quoted by our customer service department.

Computer Mounts & Accessories

Arm Mount **$487**
029-5186-00

Arm Mount with Tray **$733**
029-5185-00

Pivoting Mount **$217**
029-5179-00

Sliding Track Monitor Mount
029-5255-00 **$929**
Field Install Kit
002-1410-01 **$929**

CABLES & MONITOR SOLD SEPARATELY
015-2771-00 High Voltage Harness **$164**
015-2775-00 Low Voltage Harness **$218**
002-1125-00 17" Exorvision Monitor **$1,827**

Additional Items

TS43-800 43" Wide Lower Only **-$1,520**
TS36-800 36" Wide Lower Only **-$1,330**
TS-910 Bi-fold Door on Side Access Modulen **$63**
EL-912 Task Lighting Deduction **-$114**
015-2651-00 USB Driven CPU Cooling Fan **$164**
016-1407-00 Frosted Glass Drawer Inserts (Large Drawers) **$98**

Note: These part numbers and pricing are for ordering a complete Pivoting Worksurface Treatment stations. If reconfiguration is requested or parts are needs, please contact Customer Experience for service part numbers and pricing.

BACK TO CONTENTS

Artizan® Expressions Pivoting Worksurface Treatment Stations ORDER FORM

Starting Price

☐ TS3680 Treatment Station	$7,286
☐ TS4380 Treatment Station	$8,079
☐ TS4385 Treatment Station	$8,598
☐ TS3690 Treatment Station	$6,767
☐ TS4390 Treatment Station	$7,546

Midmark Procenter Delivery

☐ 153659-003 Worksurface Only	$1,608
☐ 153659-004 Worksurface & Asst's Instr.	$3,089
☐ 153659-002 W/S, Asst. Instr., Procenter	$5,782

B1 & B3 Base Modules
Front Storage

☐ TS-300 Eq. Drawer & Adj. Shelf	Included
☐ TS-300SS Eq. Drawer & Adj. Shelf	$43
☐ TS-305 (2) Drawer & Adj. Shelf	$96
☐ TS-305SS (2) Drawer & Adj. Shelf	$137
☐ TS-310 Eq. Drawer & (3) Drawers	$188
☐ TS-310SS Eq. Drawer & (3) Drawers	$275
☐ TS-350 (4) Drawers	$188
☐ TS-350SS (4) Drawers	$275
☐ TS-360 Eq. Drawer & (2) Drawers	$96
☐ TS-360SS Eq. Drawer & (2) Drawers	$137
☐ TS-370 (1) Drawer, Eq., (2) Drawers	$188
☐ TS-370SS (1) Drawer, Eq., (2) Drawers	$275
☐ TS-380 Glove Drawer, (2) Drawers	$188
☐ TS-380SS Glove Drawer, (2) Drawers	$275

Side Storage

☐ TS-405 Adj. Shelves	Included
☐ TS-400 2-Way Shelf, (2) Tubs	$183
☐ TS-410 2-Way Shelf, (3) Tubs	$287
☐ TS-420 Side Drawers	$188
☐ TS-420SS Side Drawers	$275
☐ TS-445 Side Kick 2-Way Shelf, (2) Tub	$367
☐ PN-1000 Airglide® Opening Systems	$562

B2 – Center Base Module

☐ TS-500 Nitrous/CPU Storage	Included
☐ TS-520 (2) Adj. Shelves	$38
☐ TS-560 Control Tray Provisions	Included

M1 – Midsection

☐ TS-700 Floating Glass Shelf	Included
☐ TS-750 Open Midsection	Included
☐ TS-760 6" Accessory Panel	$112
☐ TS-765 9" Accessory Panel	$112
☐ TS-795 Privacy Panel Option	$52

U1 & U2 – Upper Storage

☐ TS-100 Single Lift-Up Door/Solid Back	Included
☐ TS-110 Single Lift-Up Door/Pass-Thru	$202
☐ 029-5348-03 HL System (Straight Up) OR 029-5323-02 HS System (Up & Over)	Included

U1 & U2 – Upper Storage

☐ TS-130 Doors/Solid Back	-$135
☐ TS-135 Doors/ Pass-Thru	-$86
☐ TS-105 Doors & CPU Storage/Solid Back	$83
☐ TS 105 Doors & CPU Storage/Pass-thru	$285
☐ TS-230 Resin Panel Upgrade – Front	$416
☐ TS-235 Resin Panel Upgrade – Back	$416
☐ TS-120 Valance Cap	-$380
☐ TS-125 Glove Valance Cap	-$133

Computer Options

☐ 029-5185-00 Double Arm Mount/Keyboard	$733
☐ 029-5186-00 Double Arm Mount	$487
☐ 029-5179-00 Pivoting Mount	$217
☐ 029-5255-00 Sliding Track Mount	$929
☐ 015-2771-00 High Voltage Harness	$164
☐ 015-2775-00 Low Voltage Harness	$218
☐ 002-1125-00 17" Excorvision Monitor	$1,827

Color Options

☐ TS-650 Upper OR Lower Non-Standard Color	$190
☐ TS-655 Upper AND Lower Non-Standard Color	$382
☐ TSS36-620 36" W Laminate CT Deduction	-$523
☐ TSS43-620 43" W Laminate CT Deduction	-$703
☐ Zodiaq CT Upgrade	Call for Pricing

Additional Items

☐ TS36-800 36" W Lower Only	-$1,330
☐ TS43-800 43" W Lower Only	-$1,520
☐ TS-910 Bi-Fold Door-Side Access Module	$63
☐ EL-912 Task Light Deduction	-$114
☐ 015-2651-00 USB Driven CPU Cooling Fan	$164
☐ 016-1407-00 Frosted Glass Drawer Inserts	$98

UPPER CABINET COLOR _____

LOWER CABINET COLOR _____

RESIN (OPTIONAL) COLOR _____

COUNTERTOP COLOR _____

CABINET UPHOLSTERY _____

Total $ _____ x (qty) = _____

DENTIST NAME _____ ☐ RIGHT HAND ☐ LEFT HAND

SIGNATURE _____

DEALER _____ CITY _____

CONTACT _____

BACK TO CONTENTS

Artizan® Expressions Treatment Expansions

Copy-Complete-Send

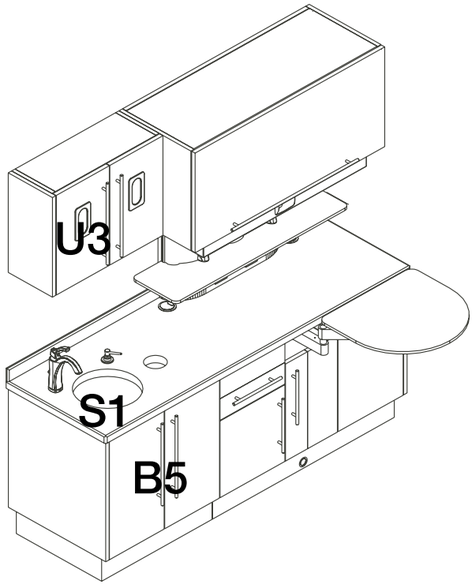

TS4380 with Left Side Expansion Shown

Expanding the Right or Left Side of Treatment Stations

S1 - Sink Module

- Includes solid surface countertop, waste drop, touch/proximity faucet, stainless steel undermount sink and stainless steel soap dispenser

U3 – Upper Module

- Select adjustable shelves, towel/cup and/or glove dispenser

B5 – Drawer Module

- Choose from a variety of drawer combinations

Note: Send in Treatment Expansion Form with the Treatment Station Order Form

U3 - Upper Module

☐ TS-968 Upper Module with (2) Adj Shelves	$662
☐ TS-970 Upper Module with Towel/Cup	$746
☐ TS-972 Upper Module w/ Towel/Cup/Glove	$911
☐ TS-974 Upper w/ Towel/Cup/Double Glove	$944

B5 - Base Module

☐ TS-895 (4) Drawers	$1,886
☐ TS-895SS (4) Drawers SS	$2,107
☐ TS-900 Eq. Drawer, Adj. Shelf	$1,701
☐ TS-900SS Eq. Drawer , Adj. Shelf SS	$1,750
☐ TS-905 Eq. Drawer, (3) Drawers	$1,701
☐ TS-905SS Eq. Drawer, (3) Drawers SS	$1,897
☐ TS-910M Sink Module	$2,778
☐ TS-915 Eq. Drawer, (2) Drawers	$1,796
☐ TS-915SS Eq. Drawer, (2) Drawers SS	$1,970

Options and Accessories

☐ TS-631 Upper OR Lower Non-Standard Color	$52
☐ TS-641 Upper AND Lower Non-Standard Color	$83
☐ TS-661 Laminate Countertop Deduction	-$353
☐ Zodiaq® Countertop Upgrade	Call for Pricing

Right or Left Expansion
(circle one)

UPPER CABINET COLOR _____

LOWER CABINET COLOR _____

RESIN (OPTIONAL) COLOR _____

COUNTERTOP COLOR _____

CABINET UPHOLSTERY _____

Total $ _____ x (qty) = _____

DENTIST NAME _____ ☐ RIGHT HAND ☐ LEFT HAND

SIGNATURE _____

DEALER _____ CITY _____

CONTACT _____

BACK TO CONTENTS

Artizan® Expressions ECS9610 Echelon

Starting Price (Includes Slide-Out Worksurface):

ECS9610-R	Echelon Console with Sliding Right mounted work surface	$20,744
ECS9610-L	Echelon Console with Sliding Left mounted work surface	$20,744

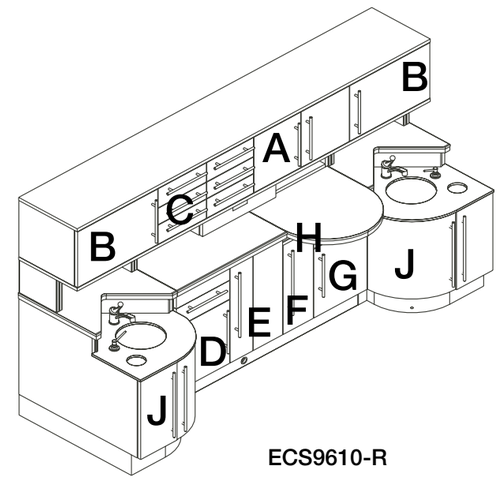

ECS9610-R

Consider using a Treatment and side sink stations if room size permits. Recommended room depth = 10' 6".

Starting price includes the following:

A – Four Compartment Center Upper Module (EC-5200)
- Two 3-drawer sections and 2-shelf sections.

B – Dispenser Modules
- Towel-cup dispensers both sides.

C – Midsection (EC-200)
- Flip-down utility compartment with clock centered

D – Base Module (ECS-300)
- Equipment drawer and adjustable shelf.

E – Base Module (ECS-400)
- Typical storage for nitrous rubber goods.

F – Base Module (ECS-445)
- Nitrous storage

G – Base Module (ECS-700)
- False panel and 1-adjustable shelf.

H – Slide-out work surface
- Slides in/out for easy positioning.

J – Round Sink Modules
- Delta chrome lever faucet and soap dispenser, solid surface integrated sink, Tapmaster® toe-kick faucet control and waste chute.

Electrical
- 4-task lights, 2-midsection outlets, 1-outlet in module D and 1-outlet in module G.

ZONE OPTIONS

Midmark Procenter Instrument Delivery System

___153659-008 Assistant's Instruments and Procenter Delivery System for Slide-out Work Surface **$5,086**

___153659-009 Assistant's Instruments for Slide-out Work Surface **$2,379**

Options

Part #	Description	Price
153607	Add or Delete Handpiece Position	+/- 400
029-2808-00	Second Syringe (Procenter Delivery Unit)	170
153630-004	Handpiece Illumination System	514
029-2853-01	Tubing and Lamp for Fiber Optic Handpiece	290
029-2853-00	Tubing for ISO-C Fiber Optic Handpiece	225
153668-002	Chair Control, Dentist's Instruments, Ultra Chair	308
153668-003	Chair Control, Assistant's Instruments, Ultra Chair	308
153668-004	Chair Control, Dentist's Instruments, Elevance Chair	308
153688-005	Chair Control, Assistant's Instruments, Elevance Chair	308
029-2809-00	Heated Dentist's Syringe**	321
152956-01	Second HVE for Assistant's Instruments	132

*** (Requires Power Supply)*

BACK TO CONTENTS

ZONE OPTIONS

A - Upper Module

2-4" Drawers, 4-5" Drawers, & 4-Adj. Shelves
EC-5200L Drawers Left **Included**
EC-5200R Drawers Right **Included**

4-4" Drawers & 8-5" Drawers
EC-5210 **Included**

Viewer Panel, 2-4", & 4-5" Drawers
EC-5220L Drawers Left **-$143**
EC-5220R Drawers Right **-$143**

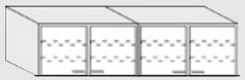

8-Adjustable Shelves
EC-5230 **-$285**

4-Adjustable Shelves & IC-65W2 Monitor Mount
EC-5240 **Included**

Shelves for EC5200 & 5230 Upper Module
EC-500 Glass Shelves (set of 4) **$123**
EC-510 Wood Shelves (each) **$19**

Shelves for EC-5240 Upper Module
EC-505 Glass Shelves (set of 4) **$123**
EC-515 Wood Shelves (each) **$19**

C - Midsection

Clock (centered)
EC-200 **Included**

Clock (offset) & Cut-out for Flowmeter
EC-210 **Included**

DE100 Full Size Table Top Viewer
Fits into cubby on either side of clock.
EL-232 **$258**

D - Base Module

016-1407-00 Frosted Glass Inserts (large drawers only) $98/drawer

EC96-390 Writing Surface $62

Eq. Drawer &
Adj. Shelf
ECS-300 **Included**
ECS-300SS **$43**

2-Drawer &
Adj. Shelf
ECS-310 **$95**
ECS-310SS **$136**

4-Drawer
ECS-320 **$187**
ECS-320SS **$271**

4-Drawer
ECS-350 **$187**
ECS-350SS **$271**

3-Drawer
ECS-360 **$95**
ECS-360SS **$136**

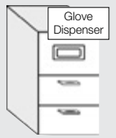

2-Drawer &
Glove Dispenser
ECS-380 **$187**
ECS-380SS **$271**

E - Base Module

Nitrous Storage
ECS-400 **Included**

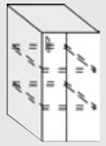

2-Adj. Shelves
ECS-420 **$38**

F - Base Module

Nitrous Storage
ECS-445
Included

2-Adj. Shelves
ECS-450
$38

Bottle included with control system

G - Base Module

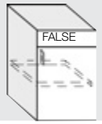

False Panel &
Adj. Shelf
ECS-700 **Included**

False Panel &
4" Drawer
ECS-710 **$94**
ECS-710SS **$136**

F/G - Combine Modules

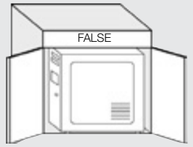

CPU Storage with
CPU cooling fan
ECS-750 **$187**

BACK TO CONTENTS

Artizan® Expressions ECS9610 Echelon

Options and Accessories

USB Hub

4 Port USB Hub

002-1174-00
Includes 4 ft. cable
and power supply.
$117

Color Options & Upgrades
ECS-650 Formica® or Wilsonart® laminate **$434**
ECS-655 Pionite® or Nevamar® laminate **$555**
ECS-600 Earthstone countertop upgrade **$491**

Additional Items

EC-215 Single glove disp. module B (both sides) **$322**
EC-220 Double glove disp. module B (both sides) **$381**
002-1173 Clock timer deduction. **-$225**
EL-913 Task light deduction (4). **-$456**

Note: These part numbers and pricing are for ordering a complete ECS9610. If reconfiguration is requested or parts are needed, please contact Customer Experience for service part numbers and pricing.

BACK TO CONTENTS

Artizan® ECS9610 Echelon Console ORDER FORM

Copy-Complete-Send

Starting Price = $19,946

☐ ECS9610-R Echelon Console Right W/S	$20,744
☐ ECS9610-L Echelon Console Left W/S	$20,744

A - Upper Module

☐ EC-5200L Drawers (left) and 4-adj. shelves	Included
☐ EC-5200R Drawers (right) and 4-adj. shelves	Included
☐ EC-5210 4-4" and 8-5" drawers	Included
☐ EC-5220R Viewer panel & drawers (right) ded.	-$143
☐ EC-5220L Viewer panel & drawers (left) ded.	-$143
☐ EC-5230 All storage with adjustable shelving	-$285
☐ EC-5240 Two section storage & IC-65W2 mount	Included
☐ EC-500 Glass shelves (set of 4)	$123
☐ EC-510 Additional wood shelves (each)	$19
☐ EC-505 Glass shelves (set of 4)	$123
☐ EC-515 Additional wood shelves (each)	$19

C - Midsection

☐ EC-200 Clock centered	Included
☐ EC-210 Clock offset & cut-out for flowmeter	Included
☐ EL-232 Table top full size viewer	$258

D - Base Module

☐ ECS-300 Equipment drawer & adj. shelf	Included
☐ ECS-300SS Equipment drawer & adj. shelf	$43
☐ ECS-310 2-Drawer & adj. shelf	$95
☐ ECS-310SS 2-Drawer & adj. shelf	$136
☐ ECS-320 4-Drawer	$187
☐ ECS-320SS 4-Drawer	$271
☐ ECS-350 4-Drawer	$187
☐ ECS-350SS 4-Drawer	$271
☐ ECS-360 3-Drawer	$95
☐ ECS-360SS 3-Drawer	$136
☐ ECS-380 2-Drawer & glove dispenser	$187
☐ ECS-380SS 2-Drawer & glove dispenser	$271
☐ EC96 Lift-up writing panel	$62
☐ 016-1407-00 Frosted glass inserts	$98

E - Base Module

☐ ECS-400 Bi-fold door compartment	Included
☐ ECS-420 2-adjustable shelves	$38

F - Center Module

☐ ECS-445 Storage (empty)	Included
☐ ECS-450 2-adjustable shelves	$38
☐ ECS-455 Water bottle slide (bottle not included)	$97

G - Base Module

☐ ECS-700 False panel & adjustable shelf	Included
☐ ECS-710 False panel, 2-drawers	$97
☐ ECS-710SS False panel, 2-drawers	$136

F/G - Combine Modules

☐ ECS-750 CPU storage with CPU cooling fan	$187

Midmark Procenter Delivery

☐ 153659-008 Assistant's Instruments and Procenter	$5,086
☐ 153659-009 Assistant's Instruments	$2,379

Color Options & Upgrades

☐ ECS-650 Formica® or Wilsonart® laminate	$434
☐ ECS-655 Pionite® or Nevamar® laminate	$555
☐ ECS-600 Earthstone countertop upgrade	$491

Other Options

☐ EC-215 Single glove disp. module B (both sides)	$322
☐ EC-220 Double glove disp. module B (both sides)	$381
☐ 002-1173 Clock timer deduction	-$225
☐ EL-913 Task light deduction (4)	-$456
☐ 002-1174-00 4 Port USB Hub	$117

UPPER CABINET COLOR _____

LOWER CABINET COLOR _____

COUNTERTOP COLOR _____

Total $ _____ x (qty) = _____

DENTIST NAME _____ ☐ RIGHT HAND ☐ LEFT HAND

SIGNATURE _____

DEALER _____ CITY _____

CONTACT _____

Notes

CS109-TB Shown

Artizan® Expressions Central Stations

Pricing Example

Part #	Description	Price
CS109-TB	90" Height Central Station	$15,511

A - Sink Module

	Touch/Proximity Faucet, Stainless Steel Sink, Stainless Steel Soap Dispenser, Waste Drop and Towel Dispenser	Included

B - Lower Midsection Drawer Module

	Configuration: CS-300 (drawers open to B Side)	Included

C - Lower Midsection Storage Module

	Pass-Thru Tray Storage (CS-600)	Included

D - Upper Pass-Thru Midsection

	Pass-Thru Tray Storage with (3) Adjustable Shelves, Centered Privacy Panel, Frosted Glass Shelf (CS200)	Included
	Glove Dispensers A Side - Two	$200
	Glove Dispensers B Side - Two	$200

E - Lower Equipment End

	E.1 Configuration: Pass-Thru Storage with (2) Adjustable Shelves (CS400)	Included
	E.2 Configuration: Pass-Thru Storage with (2) Adjustable Shelves (CS400)	Included
	E.3 Configuration: Pass-Thru Storage with (2) Adjustable Shelves (CS400)	Included

F - Upper Equipment End

	Bi-Fold Doors with Suspended Shelf Inserts (CS-575)	$383

Countertop

	Standard Midmark Corian®	Included

Cabinet Panel Color

	Standard Midmark Cabinet Panel Selection (Bottom)	Included
	Standard Midmark Cabinet Panel Selection (Upper)	Included

TOTAL $16,294

Starting Price:

CS109	72" Height, 109" Length	$14,334
CS109-TB	90" Height, 109" Length	$15,511

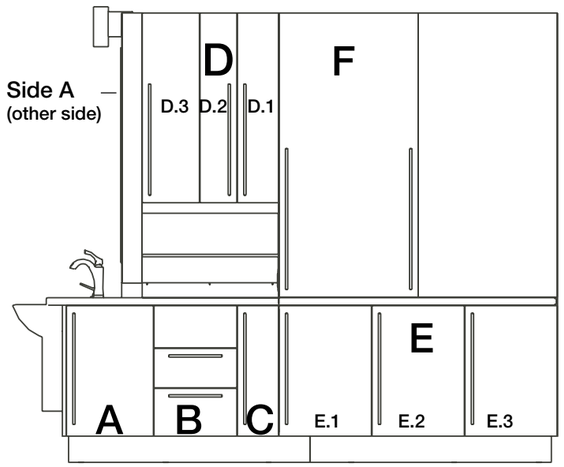

Starting price includes the following:

A – Sink Module

- Touch/Proximity Faucet, Stainless Steel Sink, Soap Dispenser, Waste Drop and Towel Dispenser

B – Lower Midsection Drawer Module (CS-300)

- Writing Surface, Drawer, FF (Side A) and FF, 2- Drawers (Side B)

C – Lower Midsection Storage Module (CS-600)

- Pass-Thru Storage

D – Upper Pass-Thru Midsection (CS-200)

- Centered Privacy Panel with Frosted Glass Shelf, LED Task Lighting and Outlets (Side A & B)

E – Lower Equipment End

- 3-Compartment Pass-Thru with 2 Adjustable Shelves Each

F – Upper Equipment End

- Includes Bi-Fold Doors and Steel Support Structure for X-Ray Equipment and Cabinet Mounted Lights – Specify make and model

Electrical

- Outlet and task light on both side A & B with sensor for light on Assistant's side

Artizan® Expressions Central Stations

ZONE OPTIONS

A - Sink Module

Touch/Proximity Faucet
Stainless Steel Sink with Shroud
Stainless Steel Soap Dispenser
Waste Drop
Towel Dispenser
(All Included)

C - Lower Midsection Storage Module

Pass-Thru Storage
for CPU
CS-600 **(Included)**

Pass-Thru Storage
with (2) Shelves
CS-610 **$40**

B - Lower Midsection Drawer Module

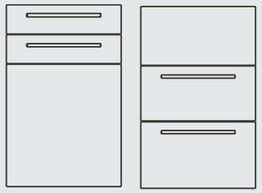

[A Side] Writing Surface., Drw., FF*
[B Side] FF, (2) Drawers
CS-300 **(Included)**
CS-300SS **$226**

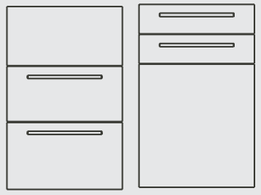

[A Side] FF, (2) Drawers
[B Side] Writing Surface, Drw., FF
CS-310 **(Included)**
CS-310SS **$226**

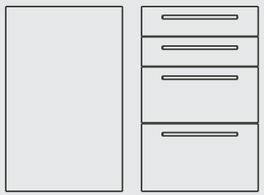

[A Side] FF
[B Side] Writing Surface, (3) Drawers
CS-320 **(Included)**
CS-320SS **$226**

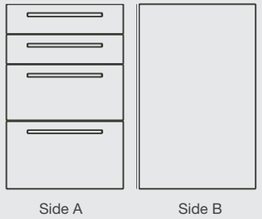

[A Side] Writing Surface, (3) Drawers
[B Side] FF
CS-330 **(Included)**
CS-330SS **$226**

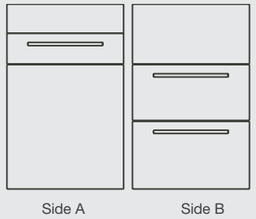

[A Side] Eq. Drawer, FF (electrical)
[B Side] FF, (2) Drawers
CS-340 **$111**
CS-340SS **$337**

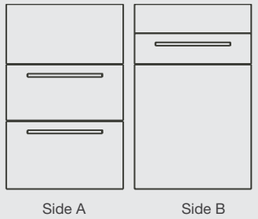

[A Side] FF, (2) Drawers
[B Side] Eq. Drawer, FF (electrical)
CS-350 **$111**
CS-350SS **$337**

*FF - False Front

D - Upper-Pass Thru Midsection

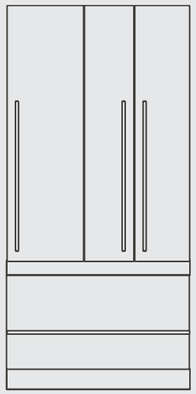

Pass-Thru Tray Storage with Shelves – with Frosted Glass Shelf
CS-200 **(Included)**

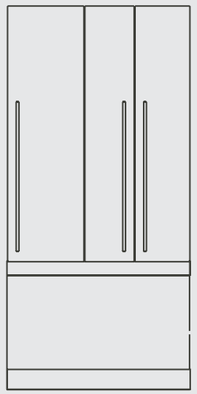

Pass-Thru Tray Storage with Shelves – No Frosted Glass Shelf
CS-210 **(Included)**

Glove Dispenser Options

A Side - One
CS-105 **$162**

A Side - Two
CS-110 **$200**

B Side - One
CS-115 **$162**

B Side - Two
CS-120 **$200**

Cup Dispenser Options

A Side (Module D)
C-125 **$106**

B Side (Module D)
C-130 **$106**

Note: Glove and cup dispensers are located beneath the upper tray storage.

Note: CS109 includes (2) shelves and CS109-TB includes (3) shelves

E - Lower Equipment End

Note: Each module (E.1, E.2, E.3) can be selected separately from choices below or open for side delivery or desk space.

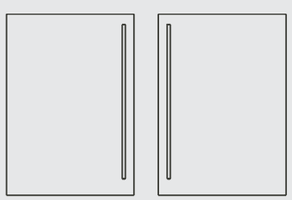

[A Side & B Side] Pass-Thru with (2) Adj. Shelves
CS-400 **(Included)**

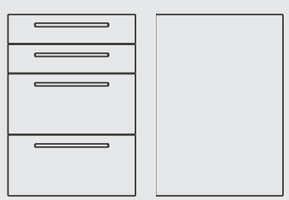

[A Side] (4) Drawers
[B Side] FF
CS-420 **$166**
CS-420SS **$241**

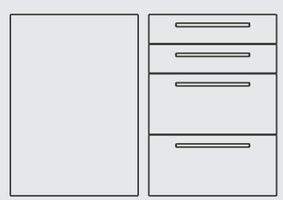

[A Side] FF
[B Side] (4) Drawers
CS-425 **$166**
CS-425SS **$241**

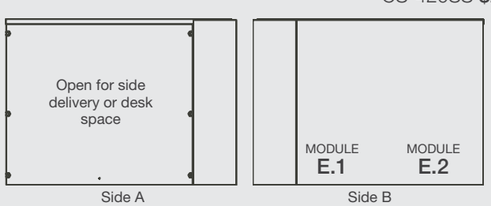

[A Side] Side Delivery or Desk Opening
[B Side] FF
CS-435 **-$380**

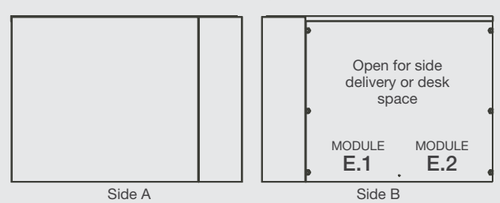

[A Side] FF
[B Side] Side Delivery or Desk Opening
CS-445 **-$380**

Artizan® Expressions Central Stations

ZONE OPTIONS

F - Upper Equipment End

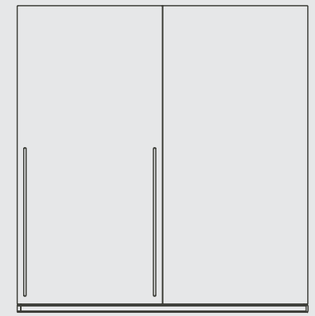

Bi-Fold Doors (Pass-Thru)
CS-500 **(Included)**

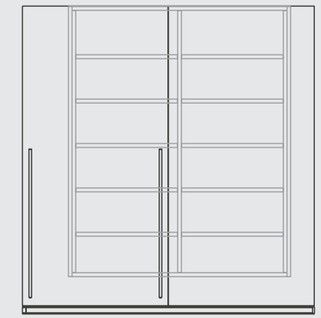

Bi-Fold Doors with Shelf Insert (Pass-Thru)
CS-570 **$795**

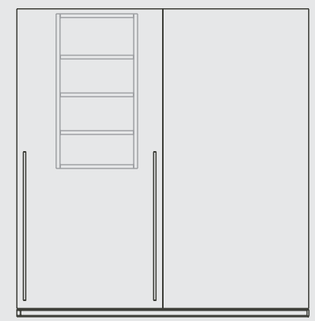

Bi-Fold Doors with Suspended Shelf Insert (Pass-Thru)
CS-575 **$383**

Note: CS-575 only available on CS109-TB

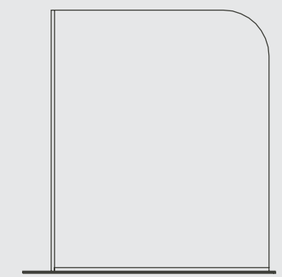

Full Privacy Panel
CS-560 **-$603**

Options and Accessories

Color Options

CS-650 72" H Upper OR Lower Non-Standard Color **$572**
CS-655 72" H Upper AND Lower Non-Standard Color **$954**
CSTB-650 90" Upper OR Lower Non-Standard Color **$572**
CSTB-655 90" Upper AND Lower Non-Standard Color **$1,141**
CS-620 Laminate Countertop Deduction **-$556**
Zodiaq® Countertop Upgrade – **Call for Pricing**

Additional Items

EL-912 Task Light Deduction **-$114**
Lead Lining – **Call for Pricing**
016-1407-00 Frosted Glass Inserts (Large Drawers) **$98**
029-4378-00 Bi-Fold Interlock **$245**
015-2621-00 CPU Cooling Fan **$159**

Note: Must include latch bracket 050-5625-00 **$16**

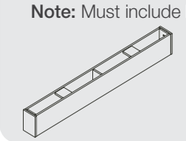

6" Top Trim Panel for CS109-TB
CS-900 **$434**
Custom Sizes Available

Note: These part numbers and pricing are for ordering a complete Central Station. If reconfiguration is requested or parts are needed, please contact Customer Experience for service part numbers and pricing.

Artizan® Expressions Central Stations

Copy-Complete-Send

Starting Price

- ☐ CS109 Central Station $14,334
- ☐ CS109-TB Central Station $15,511

A - Sink Module

- ☐ Touch Proximity Faucet, Stainless Steel Sink, Stainless
- ☐ Steel Sink, Waste Drop, Towel Dispenser Included

B - Lower Midsection Drawer Module

- ☐ CS-300 [A Side] Writing Surface, FF Included
  [B Side] FF, (2) Drawers
- ☐ CS-300SS Same as Above – Stainless Steel $226
- ☐ CS-310 [A Side] FF, (2) Drawers
  [B Side] Writing Surface, FF Included
- ☐ CS-310SS Same as Above – Stainless Steel $226
- ☐ CS-320 [A Side] FF
  [B Side] W/S, (3) Drawers Included
- ☐ CS-320SS Same as Above – Stainless Steel $226
- ☐ CS-330 [A Side] W/S, (3) Drawers
  [B Side] FF Included
- ☐ CS-330SS Same as Above – Stainless Steel $226
- ☐ CS-340 [A Side] Eq. Drawer, FF
  [B Side] FF, (2) Drawers $111
- ☐ CS-340SS Same as Above – Stainless Steel $337
- ☐ CS-350 [A Side] FF, (2) Drawers
  [B Side] Eq. Drawer, FF $111
- CS-350SS Same as Above – Stainless Steel $337

C - Lower Midsection Storage Module

- ☐ CS-600 Pass-Thru Storage for CPU Included
- ☐ CS-610 Pass-Thru Storage with (2) Shelves $40

D - Upper Pass-Thru Midsection

- ☐ CS-200 Pass-Thru Storage with Glass Shelf Included
- ☐ CS-210 Pass-Thru Storage - No Glass Shelf Included
- ☐ CS-105 One Glove Dispenser Side A $162
- ☐ CS-110 Two Glove Dispensers Side A $200
- ☐ CS-115 One Glove Dispenser Side B $162
- ☐ CS-120 Two Glove Dispensers Side B $200

E - Lower Equipment End

- ☐ CS-400 [A Side & B Side] Pass-Thru Included
- ☐ CS-420 [A Side] (4) Drawers
  [B Side] FF $166
- ☐ CS-420SS Same as Above – Stainless Steel $241
- ☐ CS-425 [A Side] FF
  [B Side] (4) Drawers $166
- ☐ CS-425SS Same as Above – Stainless Steel $241
- ☐ CS-435 [A Side] Side Delivery/Desk Space
  [B Side] FF -$380
- ☐ CS-445 [A Side] FF
  [B Side] Side Delivery/Desk Space -$380

F - Upper Equipment End

- ☐ CS-500 Bi-Fold Doors Included
- ☐ CS-570 Bi-Fold Doors with Shelf Insert $795
- ☐ CS-575 Bi-Fold Doors – Suspended Insert (TB) $383
- ☐ CS-560 Full Privacy Panel -$603

Color Options

- ☐ CS-650 72" H Upper OR Lower Non-Standard Color $572
- ☐ CS-655 72" H Upper AND Lower Non-Standard Color $954
- ☐ CSTB-650 90" Upper OR Lower Non-Standard Color $572
- ☐ CSTB-655 90" Upper AND Lower Non-Standard Color $1141
- ☐ CS-620 Laminate Countertop Deduction -$556
- ☐ Zodiac® Countertop Upgrade Call for Pricing

Additional Items

- ☐ EL-912 Task Light Deduction -$114
- ☐ Lead Lining Call for Pricing
- ☐ 016-1407-00 Frosted Glass Inserts $98
- ☐ 029-4378-00 Bi-Fold Interlock $245
- ☐ 015-2621-00 CPU Cooling Fan $159
- ☐ 050-5625-00 Latch Bracket $16
- ☐ CS-900 6" Top Trim Panel $434

UPPER CABINET COLOR _____

LOWER CABINET COLOR _____

RESIN (OPTIONAL) COLOR _____

COUNTERTOP COLOR _____

CABINET UPHOLSTERY _____

Total $ _____ x (qty) = _____

DENTIST NAME _____ ☐ RIGHT HAND ☐ LEFT HAND

SIGNATURE _____

DEALER _____ CITY _____

CONTACT _____

BACK TO CONTENTS

Artizan® Expressions Side Stations

Standard Models

SS5800-R

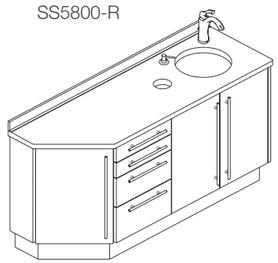

SS7200-R

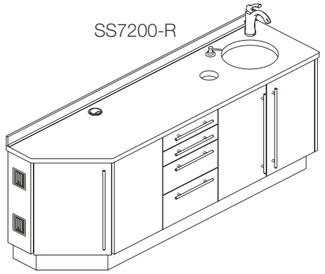

WHSS5800-R

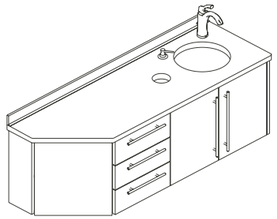

WHS5810-L

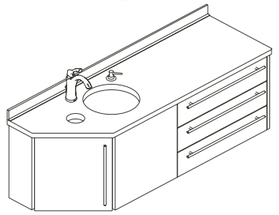

SS5810-L

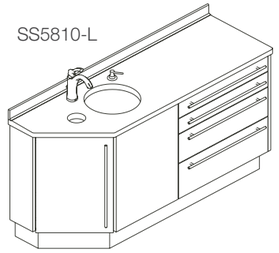

SS7210-L

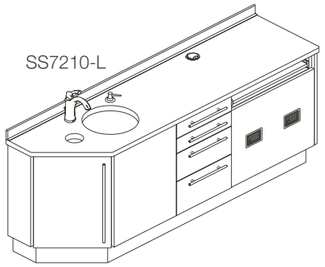

SS6310-L

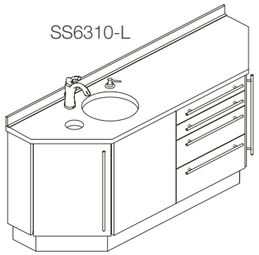

SS6210-L

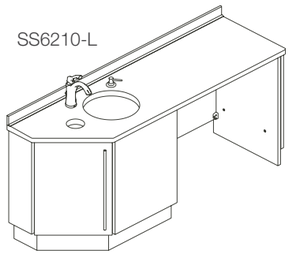

SS7300-R

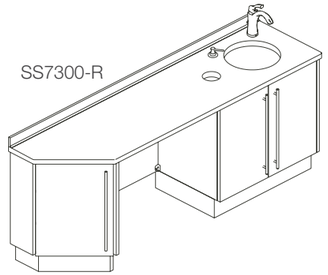

BACK TO CONTENTS

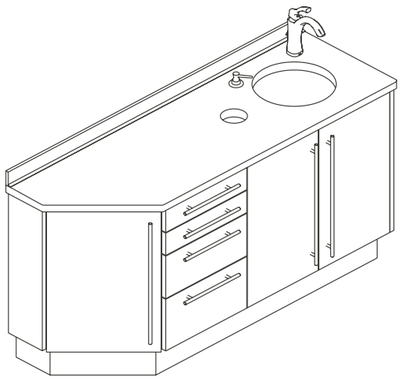

SS5800-R

Starting Price = $5,646
SS5800-L Side Station - Sink LEFT
SS5800-R Side Station - Sink RIGHT

- Countertop Length = 57 ¾"
- Angled Shelf Storage (12" WD)
- Drawer/Shelf Storage Module (16" WD)
- Sink Base Module (28" WD)

Drawer/Storage Module Variations

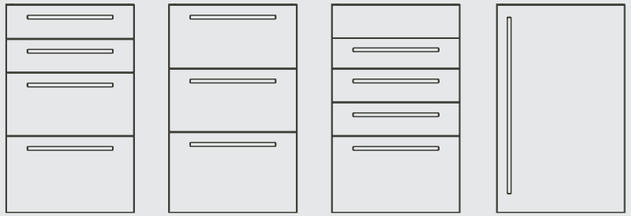

4 - Drawers
- ☐ SS-110 **Included**
- ☐ SS-110SS **$219**

3 - Drawers
- ☐ SS-120 **-$71**
- ☐ SS-120SS **$144**

Eq. Drawer, 3-Drawers
- ☐ SS-140 **-$31**
- ☐ SS-140SS **$219**

Door, 2-Adj. Shelves
- ☐ SS-160 **-$181**

☐ 016-1407-00 Frosted Glass Inserts (large drawers only) **$98/drawer**

Additional Options

Part #	Description	Price
☐ PL-2400M	Single Glove Dispenser (Mounted in Cab. Door)	$162
☐ PL-2410M	Double Glove Dispenser (Mounted in Cab. Door)	$200
☐ SS-300	Shelf in lieu of total sink package ded	-$665
☐ EL-125	Wired outlet in drawer/shelf mod (incl. on SS-140)	$111
☐ PL-2326M	Sharps/Waste Chute Combo	$328

Color Options & Upgrades

☐ SS-650	Side Station Non-Standard Cabinet Color	$190
☐ SS-620	Side Station Laminate Countertop Deduction	-$770
☐ Quartz countertop Upgrade		Call for Pricing

Total $ _____ x (qty) = _____

DENTIST NAME ☐ RIGHT HAND ☐ LEFT HAND

SIGNATURE

DEALER CITY

CONTACT

CABINET COLOR/S

COUNTERTOP COLOR

Artizan® Expressions Side Stations

Copy-Complete-Send

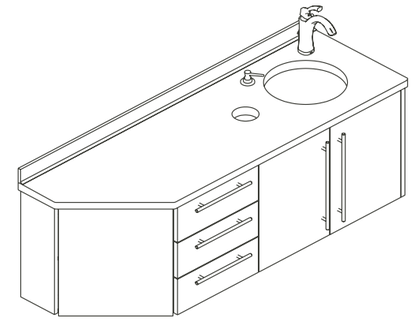

WHSS5800-R

Starting Price = $3,895
WHSS5800-L Wall Hung Station - Sink LEFT
WHSS5800-R Wall Hung Station - Sink RIGHT

- Countertop Length = 57 ¾"
- Angled Shelf Storage (12" WD)
- Drawer/Shelf Storage Module (16" WD)
- Sink Base Module (28" WD)

Note: Recommended loading is 100lbs or 20lbs/ft

Drawer/Storage Module Variations

4 - Drawers
- ☐ WHSS-115 **$162**
- ☐ WHSS-115SS **$382**

3 - Drawers
- ☐ WHSS-125 **Included**
- ☐ WHSS-125SS **$219**

3 - Drawers
- ☐ WHSS-175 **$54**
- ☐ WHSS-175SS **$274**

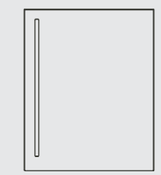

Door, 2-Adj. Shelves
- ☐ WHSS-165 **-$181**

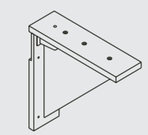

Countertop Support
- ☐ WHSS5800-105 **-$1,100**

Note: WHSS5800-105 removed the center drawer/ shelf module and the angled shelf storage to be replaced with a countertop support only

☐ 016-1407-00 Frosted Glass Inserts (large drawers only) **$98/drawer**

Additional Options

Part #	Description	Price
☐ PL-2400M	Single Glove Dispenser (Mounted in Cab. Door)	$162
☐ PL-2410M	Double Glove Dispenser (Mounted in Cab. Door)	$200
☐ SS-300	Shelf in lieu of total sink package ded	-$665
☐ EL-125	Wired outlet in drawer/shelf mod (incl. on SS-140)	$111
☐ PL-2326M	Sharps/Waste Chute Combo	$328

Color Options & Upgrades

☐ SS-650	Side Station Non-Standard Cabinet Color	$190
☐ SS-620	Side Station Laminate Countertop Deduction	-$770
☐ Quartz countertop Upgrade		Call for Pricing

Total $ _____ x (qty) = _____

DENTIST NAME ☐ RIGHT HAND ☐ LEFT HAND

SIGNATURE

DEALER CITY

CONTACT

CABINET COLOR/S

COUNTERTOP COLOR

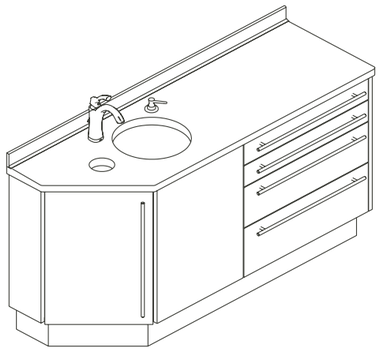

SS5810-L

- Countertop Length = 57 ¾"
- Angled Sink Base Module (30" WD)
- Drawer/Shelf Storage Module (26" WD)
- Sharps Waste Chute Combo not available in this model

Starting Price = $5,523
SS5810-L Side Station - Sink LEFT
SS5810-R Side Station - Sink RIGHT

Drawer/Storage Module Variations

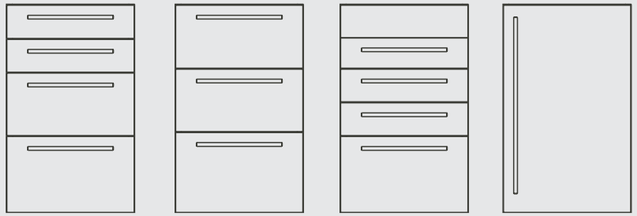

4 - Drawers
- ☐ SS-110 **Included**
- ☐ SS-110SS **$219**

3 - Drawers
- ☐ SS-120 **-$71**
- ☐ SS-120SS **$144**

Eq. Drawer, 3-Drawers
- ☐ SS-140 **-$31**
- ☐ SS-140SS **$219**

Door, 2-Adj. Shelves
- ☐ SS-160 **-$181**

☐ 016-1407-00 Frosted Glass Inserts (large drawers only) **$98/drawer**

Additional Options

Part #	Description	Price
☐ PL-2400M	Single Glove Dispenser (Mounted in Cab. Door)	$162
☐ PL-2410M	Double Glove Dispenser (Mounted in Cab. Door)	$200
☐ SS-300	Shelf in lieu of total sink package ded	-$665
☐ EL-125	Wired outlet in drawer/shelf mod (incl. on SS-140)	$111

Color Options & Upgrades

☐ SS-650	Side Station Non-Standard Cabinet Color	$190
☐ SS-620	Side Station Laminate Countertop Deduction	-$770
☐ Quartz countertop Upgrade		Call for Pricing

Total $ _____ x (qty) = _____

DENTIST NAME ☐ RIGHT HAND ☐ LEFT HAND

SIGNATURE

DEALER CITY

CONTACT

CABINET COLOR/S

COUNTERTOP COLOR

Artizan® Expressions Side Stations

Copy-Complete-Send

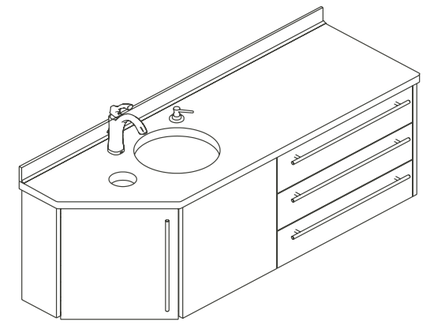

WHSS5810-L

- Countertop Length = 57 ¾"
- Angled Sink Base Module (30" WD)
- Drawer/Shelf Storage Module (26" WD)
- Sharps/Waste Chute Combo not available in this model

Note: Recommended loading is 100lbs or 20lbs/ft

Starting Price = $3,624
WHSS5810-L Wall Hung Station- Sink LEFT
WHSS5810-R Wall Hung Station - Sink RIGHT

Drawer/Storage Module Variations

4 - Drawers
- ☐ WHSS-115 **$162**
- ☐ WHSS-115SS **$382**

3 - Drawers
- ☐ WHSS-125 **Included**
- ☐ WHSS-125SS **$219**

3 - Drawers
- ☐ WHSS-175 **$54**
- ☐ WHSS-175SS **$274**

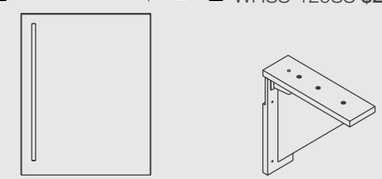

Door, 2-Adj. Shelves
- ☐ WHSS-165 **-$181**

Countertop Support
- ☐ WHSS5810-105 **-$1,100**

Note: WHSS5810-105 removed the center drawer/ shelf module and the angled shelf storage to be replaced with a countertop support only

☐ 016-1407-00 Frosted Glass Inserts (large drawers only) **$98/drawer**

☐ PL-2400M	Single Glove Dispenser (Mounted in Cab. Door)	$162
☐ PL-2410M	Double Glove Dispenser (Mounted in Cab. Door)	$200
☐ SS-300	Shelf in lieu of total sink package ded	-$665
☐ EL-125	Wired outlet in drawer/shelf mod (incl. on SS-140)	$111

Color Options & Upgrades

☐ SS-650	Side Station Non-Standard Cabinet Color	$190
☐ SS-620	Side Station Laminate Countertop Deduction	-$770
☐ Quartz countertop Upgrade		Call for Pricing

Total $ _____ x (qty) = _____

DENTIST NAME ☐ RIGHT HAND ☐ LEFT HAND

SIGNATURE

DEALER CITY

CONTACT

CABINET COLOR/S

COUNTERTOP COLOR

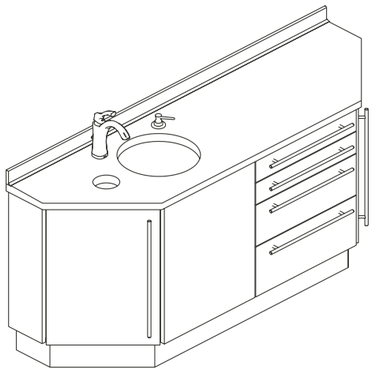

SS6310-L

- Countertop Length = 63"
- Angled Sink Base Module (30" WD)
- Drawer/Shelf Storage Module (20" WD)
- Angled Shelf Storage (12" WD)
- Sharps/Waste Chute Combo not available in this model

Starting Price = $6,506
SS6310-L Side Station - Sink LEFT
SS6310-R Side Station - Sink RIGHT

Drawer/Storage Module Variations

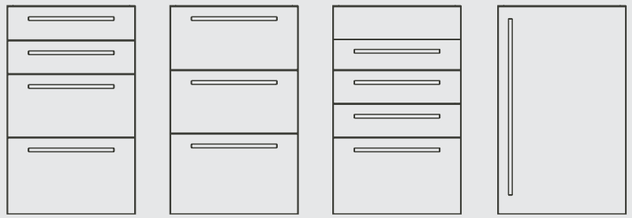

4 - Drawers	3 - Drawers	Eq. Drawer, 3-Drawers	Door, 2-Adj. Shelves
☐ SS-110 **Included**	☐ SS-120 **-$71**	☐ SS-140 **-$31**	☐ SS-160 **-$181**
☐ SS-110SS **$219**	☐ SS-120SS **$144**	☐ SS-140SS **$219**	

☐ 016-1407-00 Frosted Glass Inserts (large drawers only) **$98/drawer**

Additional Options

Part #	Description	Price
☐ PL-2400M	Single Glove Dispenser (Mounted in Cab. Door)	$162
☐ PL-2410M	Double Glove Dispenser (Mounted in Cab. Door)	$200
☐ SS-300	Shelf in lieu of total sink package ded	-$665
☐ EL-125	Wired outlet in drawer/shelf mod (incl. on SS-140)	$111

Color Options & Upgrades

☐ SS-650	Side Station Non-Standard Cabinet Color	$190
☐ SS-620	Side Station Laminate Countertop Deduction	-$770
☐ Quartz countertop Upgrade		Call for Pricing

Total $ _____ x (qty) = _____

DENTIST NAME ☐ RIGHT HAND ☐ LEFT HAND

SIGNATURE

DEALER CITY

CONTACT

CABINET COLOR/S

COUNTERTOP COLOR

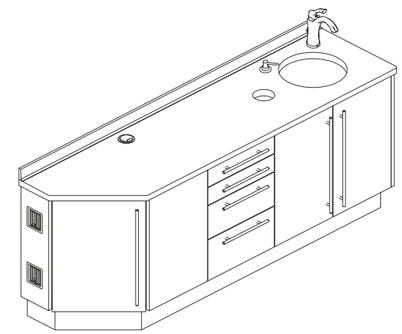

SS7200-R

- Countertop Length = 71 ¾"
- Angled CPU Storage (26" WD)
- CPU Cooling Fan Included in CPU Module
- Drawer/Shelf Storage Module (16" WD)
- Sink Base Module (28" WD)

Starting Price = $5,770
SS7200-L Side Station - Sink LEFT
SS7200-R Side Station - Sink RIGHT

Drawer/Storage Module Variations

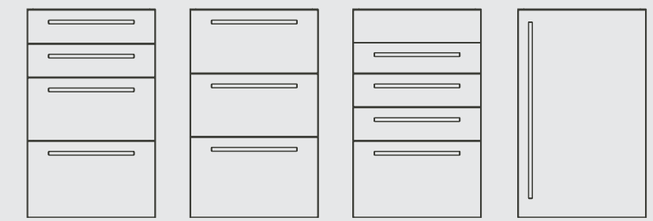

4 - Drawers	3 - Drawers	Eq. Drawer, 3-Drawers	Door, 2-Adj. Shelves
☐ SS-110 **Included**	☐ SS-120 **-$71**	☐ SS-140 **-$31**	☐ SS-160 **-$181**
☐ SS-110SS **$219**	☐ SS-120SS **$144**	☐ SS-140SS **$219**	

☐ 016-1407-00 Frosted Glass Inserts (large drawers only) **$98/drawer**

Additional Options

Part #	Description	Price
☐ PL-2400M	Single Glove Dispenser (Mounted in Cab. Door)	$162
☐ PL-2410M	Double Glove Dispenser (Mounted in Cab. Door)	$200
☐ SS-300	Shelf in lieu of total sink package ded	-$665
☐ EL-125	Wired outlet in drawer/shelf mod (incl. on SS-140)	$111
☐ PL-2326M	Sharps/Waste Chute Combo	$328

Color Options & Upgrades

☐ SS-650	Side Station Non-Standard Cabinet Color	$190
☐ SS-620	Side Station Laminate Countertop Deduction	-$770
☐ Quartz countertop Upgrade		Call for Pricing

Computer Mounts

☐ Pivoting Mount **$217**
029-5179-00

☐ Arm Mount with Tray **$733**
029-5185-00

☐ Arm Mount **$487**
029-5186-00

Total $ _____ x (qty) = _____

DENTIST NAME ☐ RIGHT HAND ☐ LEFT HAND

SIGNATURE

DEALER CITY

CONTACT

CABINET COLOR/S

COUNTERTOP COLOR

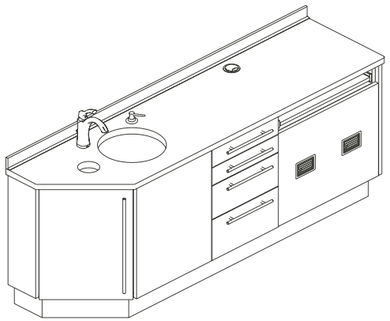

SS7210-L

Starting Price = $5,770
SS7210-L Side Station - Sink LEFT
SS7210-R Side Station - Sink RIGHT

Drawer/Storage Module Variations

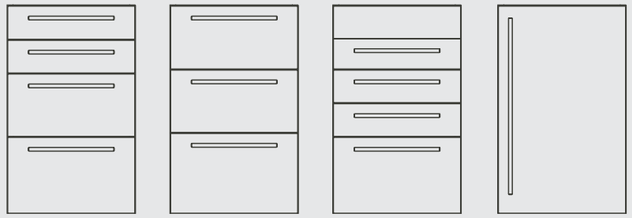

4 - Drawers
- ☐ SS-110 **Included**
- ☐ SS-110SS **$219**

3 - Drawers
- ☐ SS-120 **-$71**
- ☐ SS-120SS **$144**

Eq. Drawer, 3-Drawers
- ☐ SS-140 **-$31**
- ☐ SS-140SS **$219**

Door, 2-Adj. Shelves
- ☐ SS-160 **-$181**

☐ 016-1407-00 Frosted Glass Inserts (large drawers only) **$98/drawer**

- Countertop Length = 71 ¾"
- Angled Sink Base Module 30" WD)
- Drawer/Shelf Storage Module (16" WD)
- CPU Storage (24" WD)
- CPU Cooling Fan Included in CPU Module
- Slide-Out Keyboard Shelf in CPU Module
- Sharps/Waste Chute Combo not available in this model

Additional Options

Part #	Description	Price
☐ PL-2400M	Single Glove Dispenser (Mounted in Cab. Door)	$162
☐ PL-2410M	Double Glove Dispenser (Mounted in Cab. Door)	$200
☐ SS-300	Shelf in lieu of total sink package ded	-$665
☐ EL-125	Wired outlet in drawer/shelf mod (incl. on SS-140)	$111

Color Options & Upgrades

☐ SS-650	Side Station Non-Standard Color	$190
☐ SS-620	Side Station Laminate Countertop Deduction	-$770
☐ Quartz countertop Upgrade		Call for Pricing

Computer Mounts

☐ Pivoting Mount **$217**
029-5179-00

☐ Arm Mount with Tray **$733**
029-5185-00

☐ Arm Mount **$487**
029-5186-00

Total $ _____ x (qty) = _____

DENTIST NAME

☐ RIGHT HAND
☐ LEFT HAND

SIGNATURE

DEALER CITY

CONTACT

CABINET COLOR/S

COUNTERTOP COLOR

Artizan® Expressions Side Stations

Copy-Complete-Send

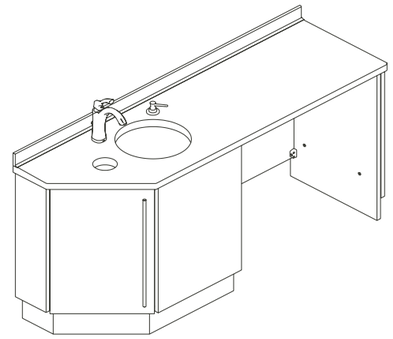

SS6210-L

Starting Price = $4,910
SS6210-L Side Station - Sink LEFT
SS6210-R Side Station - Sink RIGHT

Alcove Module Variations

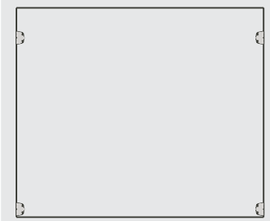

Alcove Module
- ☐ SS-130 **Included**

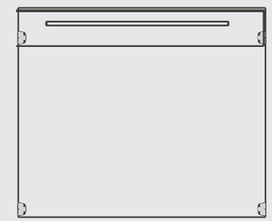

1-Drawer, Alcove Module
- ☐ SS-135 **$228**
- ☐ SS-135SS **$270**

- Countertop Length = 61 ¾"
- Angled Sink Base Module (30" WD)
- Desk/Side Delivery Alcove (29 ¼" WD Opening)
- Sharps/Waste Chute Combo not available in this model

Additional Options

Part #	Description	Price
☐ PL-2400M	Single Glove Dispenser (Mounted in Cab. Door)	$162
☐ PL-2410M	Double Glove Dispenser (Mounted in Cab. Door)	$200
☐ SS-300	Shelf in lieu of total sink package ded	-$665
☐ EL-125	Wired outlet in drawer/shelf mod (incl. on SS-140)	$111

Color Options & Upgrades

☐ SS-650	Side Station Non-Standard Cabinet Color	$190
☐ SS-620	Side Station Laminate Countertop Deduction	-$770
☐ Quartz countertop Upgrade		Call for Pricing

Total $ _____ x (qty) = _____

DENTIST NAME

☐ RIGHT HAND
☐ LEFT HAND

SIGNATURE

DEALER CITY

CONTACT

CABINET COLOR/S

COUNTERTOP COLOR

Artizan® Expressions Side Stations

Copy-Complete-Send

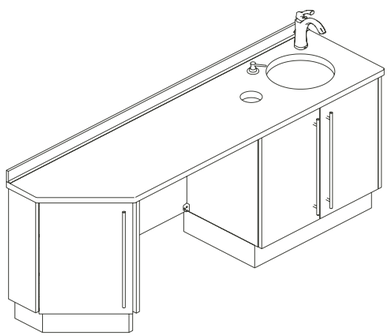

SS7300-R

- Countertop Length = 71 ¾"
- Angled Shelf Storage (12" WD)
- Desk/Side Delivery Alcove (29 ¼" WD Opening)
- Sink Base Module (28" WD)

Starting Price = $5,032
SS7300-L Side Station - Sink LEFT
SS7300-R Side Station - Sink RIGHT

Alcove Module Variations

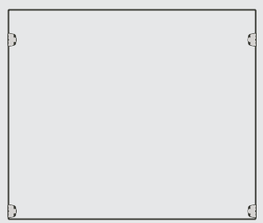

Alcove Module
☐ SS-130 **Included**

1-Drawer, Alcove Module
☐ SS-135 **$228**
☐ SS-135SS **$270**

Additional Options

Part #	Description	Price
☐ PL-2400M	Single Glove Dispenser (Mounted in Cab. Door)	$162
☐ PL-2410M	Double Glove Dispenser (Mounted in Cab. Door)	$200
☐ SS-300	Shelf in lieu of total sink package ded	-$665
☐ EL-125	Wired outlet in drawer/shelf mod (incl. on SS-140)	$111
☐ PL-2326M	Sharps/Waste Chute Combo	$328

Color Options & Upgrades

☐ SS-650	Side Station Non-Standard Cabinet Color	$190
☐ SS-620	Side Station Laminate Countertop Deduction	-$770
☐ Quartz countertop Upgrade		Call for Pricing

Total $ _____ x (qty) = _____

DENTIST NAME

☐ RIGHT HAND
☐ LEFT HAND

SIGNATURE

DEALER CITY

CONTACT

CABINET COLOR/S

COUNTERTOP COLOR

BACK TO CONTENTS

Notes

Artizan® OC2421 Ortho Cabinet/Cart

Copy-Complete-Send

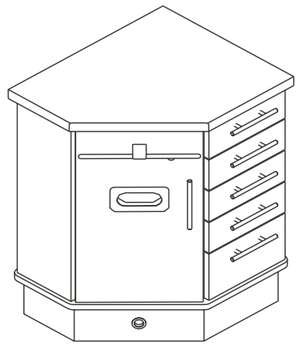

Height Dimensions
- Solid surface top and steel base = 32 1/2"
- Solid surface top and caster base = 30 3/4"
- Laminate top and steel base = 32"
- Laminate top and caster base = 30 1/4"

Starting Price $2,082

Key Features
- Solid Surface countertop.
- Matching 3mm edgebanding.
- Asepsis handles and soft-close doors.
- Stainless steel base. *Note-mobile option available.*
- 5-drawer module.
- Lift-up work surface mounted in top drawer.
- Utility compartment
- Clean water system with city water routing valve.
- Outlet on back side of cabinet.
- Soft-close, metal-sided drawers with integrated glides.
  - White sides standard, Stainless Steel (SS) upcharge.

Note - Procenter Delivery System sold separately.

☐ OC2421-R Ortho cabinet Right hand (shown)	$2,082
☐ OC2421-L Ortho cabinet Left hand delivery	$2,082

Procenter Delivery

☐ 153839-003 Doctor's 2 HP Control & Syringe and Asst's HVE & Saliva Ejector	$3,048

Procenter Options

☐ 153843 Add or Delete HP Position	+/- $400
☐ 153630-009 Handpiece Illumination System	$514
☐ 029-5076-00 Tubing for ISO-C Fiber Optic HP	$225
☐ 029-5076-01 Tubing & Lamp for Fiber Optic HP	$290
☐ 029-5102-00 2nd HVE for Asst's Instruments	$133
☐ 153844 J-Box and 6' Umbilical	$451

Color Options & Upgrades

☐ 2421-650 Formica® or Wilsonart® laminate	$110
☐ 2421-655 Pionite® or Nevamar® laminate	$134
☐ 2421-600 Earthstone® countertop upgrade	$128
☐ 2421-620 Laminate countertop deduction	-$333
☐ Zodiaq® countertop upgrade	Call for pricing
☐ 2421SS Stainless steel drawer upgrade	$253

Other Options

☐ OC2421-100 Mobile caster base	$0

CABINET COLOR/S _____

COUNTERTOP COLOR _____

Total $ _____ x (qty) = _____

DENTIST NAME _____ ☐ RIGHT HAND ☐ LEFT HAND

SIGNATURE _____

DEALER _____ CITY _____

CONTACT _____

Artizan® OC2429 Ortho Cabinet/Cart

Copy-Complete-Send

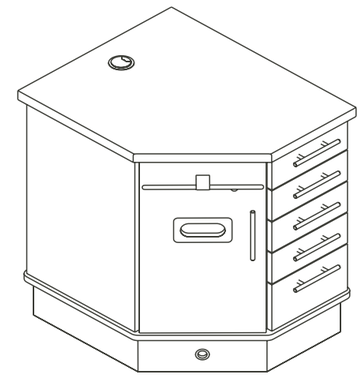

Height Dimensions
- Solid surface top and steel base = 32 1/2"
- Solid surface top and caster base = 30 3/4"
- Laminate top and steel base = 32"
- Laminate top and caster base = 30 1/4"

Starting Price $2,599

Key Features
- Solid Surface countertop.
- Matching 3mm edgebanding.
- Asepsis handles and soft-close doors.
- Stainless steel base. *Note-mobile option available.*
- 5-drawer module.
- Lift-up work surface mounted in top drawer.
- Clean water system with city water routing valve.
- Utility compartment
- Soft-close, metal-sided drawers with integrated glides.
  - White sides standard, Stainless Steel (SS) upcharge.

Note - Procenter Delivery System sold separately.

☐ OC2429-R Ortho cabinet Right hand (shown)	$2,599
☐ OC2429-L Ortho cabinet Left hand delivery	$2,599

Procenter Delivery

☐ 153839-003 Doctor's 2 HP Control & Syringe and Asst's HVE & Saliva Ejector	$3,048

Procenter Options

☐ 153843 Add or Delete HP Position	+/- $400
☐ 153630-009 Handpiece Illumination System	$514
☐ 029-5076-00 Tubing for ISO-C Fiber Optic HP	$225
☐ 029-5076-01 Tubing & Lamp for Fiber Optic HP	$290
☐ 029-5102-00 2nd HVE for Asst's Instruments	$133
☐ 153844 J-Box and 6' Umbilical	$451

Color Options & Upgrades

☐ 2429-650 Formica® or Wilsonart® laminate	$110
☐ 2429-655 Pionite® or Nevamar® laminate	$134
☐ 2429-600 Earthstone® countertop upgrade	$128
☐ 2429-620 Laminate countertop deduction	-$333
☐ Zodiaq® countertop upgrade	Call for pricing
☐ 2429SS Stainless steel drawer upgrade	$253

Other Options

☐ 029-5185-00 Double arm monitor & keyboard mount	$733
☐ OC2429-100 Mobile caster base	$0

CABINET COLOR/S _____

COUNTERTOP COLOR _____

Total $ _____ x (qty) = _____

DENTIST NAME _____ ☐ RIGHT HAND ☐ LEFT HAND

SIGNATURE _____

DEALER _____ CITY _____

CONTACT _____

Artizan® Expressions Streamline-Center Overview

Artizan® Expressions Sterilization Centers facilitate safer and more efficient instrument recirculation and our many designs are based on CDC, OSHA and ADA recommendations.

Slide-Out Waste Module
Featuring *Airglide®* foot activated open/close system.

Wrap Station
Includes two full-size wrap drawers, tape alcove, and instrument drawers.

Solid Surface Countertop
Includes undermounted stainless steel sink.

Temporary Holding
Easy-clean adjustable glass shelving. Red illuminated windows indicate contaminated materials.

Clean Storage Tower
180 degree swivel feature with adjustable racks. Requires 6"- 8" of clearance.

BACK TO CONTENTS

Artizan® Expressions SC144-200 Freestanding 12' Sterilizer Center

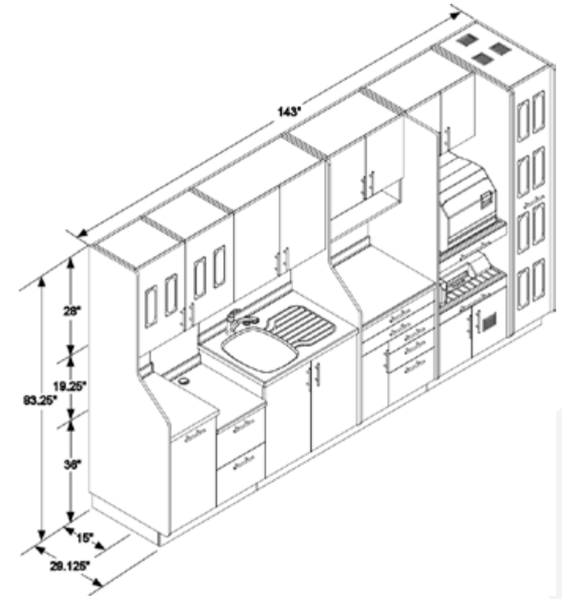

SC144-200R Sterilization Center
(Contaminated Side on Right)
Overall Dimensions: 29 1/8"D x 83 1/4"H x 143"L

Important Note - A minimum of 6" clearance is needed on the open side of the clean tower to permit it to rotate properly.

Key Features
- Solid Surface Countertop with undermount stainless sink.
- Matching 3mm edgebanding
- Brushed nickel handles (new operatory style).
- Soft-close doors and drawers.
- Window inserts.
- Stainless toe-kick base panel.
- Complete wiring system including task lighting, outlets and separate sterilizer and ultrasonic circuits.

Components Included in Starting Price

- **A** Red, illuminated upper storage for contaminated instruments. *Optional Airglide® Open/Close available.*
- **B** Slide-out waste module with regular and biohazard containers. *Optional Airglide® Open/Close available.*
- **C** Ultrasonic Module with 2-drawers. *Optional pre-soak insert available.*
- **D** Delta® retractable spray faucet and soap dispenser, undermounted 14" x 18" x 8" stainless steel sink.
- **E** Wrap Station with two full-size wrap drawers, tape alcove and 3-instrument storage drawers.
- **F** Drawer insert (1) for pouches and disposables.
- **G** Autoclave Tower with sterilizer shelves that feature slide-out moisture-proof drainboard decks. Includes vented door with drainboard for overflow bottle.
- **H** Blue, illuminated clean storage tower with 5-adjustable racks.
- **J** Straight and L-shaped panels between processing areas.
- **K** Electric chase with wiring system including 3-task lights, 2- outlets, switch and separate circuits for 2-sterilizers, ultrasonic and outlets/lights. *U.L. Hospital Grade Redundant Ground rating.*

Starting Retail Price $21,153		
	SC144-200R Sterilization Center (Right)	**$22,439**
	SC144-200L Sterilization Center (Left)	$22,439
Options & Accessories		
	029-5165-04 Airglide® system for contaminated storage	$1,076
	GS1812 Glass shelves for (lighted) contaminated upper storage (set of 4)	$123
	GI4400 Clear windows in lieu of red/blue (set of 4)	Included
	029-5165-07 Airglide® system for waste module	$955
	PS1613 Presoak insert (hold 3 full-size cassettes)	$428
	PS1624 Presoak basket (cassette size	$228
	UBS1830-U Drop-down ultrasonic module in lieu of standard recessed module deduction.	Included
Sink Upgrades		
	IS-22B Integrated solid surface sink upgrade	Included
	TM-100 Tapmaster® foot-activated faucet control	$386
	9-5960 Automatic soap dispenser (wall mount)	$83
	9-71001 Auto-towel disp. (right door above sink)	$187
	PL-2410M Double glove disp. (left door above sink	$200
	IN-2091 HVE mounted on sink	$194
Color Options & Upgrades		
	C144-650 Formica® or Wilsonart® laminate	$977
	C144-655 Pionite® or Nevamar® laminate	$1,136
	C144-660 Finished back (free-standing)	$328
	C144-600 Earthstone® countertop upgrade	$444
	C144-620 Laminate countertop deduction	-$1,492
	Zodiaq® countertop upgrade - call for pricing.	

BACK TO CONTENTS

Artizan® Expressions SC120-200 Freestanding 10' Sterilizer Center

Copy-Complete-Send

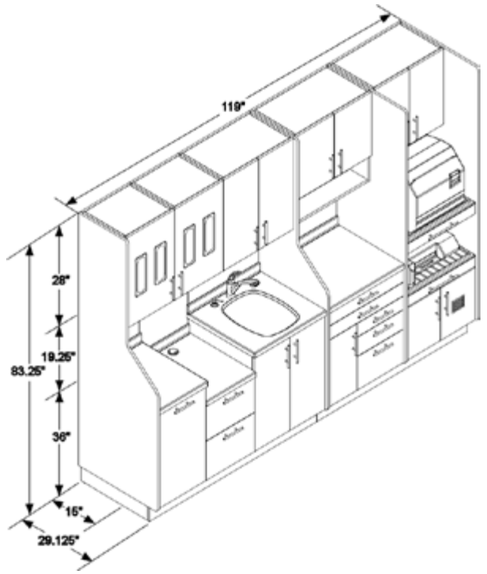

SC120-200R Sterilization Center
(Contaminated Side on Right)
Overall Dimensions: 29 1/8"D x
83 1/4"H x 119"L

Key Features

- Solid Surface Countertop with undermount stainless sink.
- Matching 3mm edgebanding
- Brushed nickel handles (new operatory style).
- Soft-close doors and drawers.
- Window inserts.
- Stainless toe-kick base panel.
- Complete wiring system including task lighting, outlets and separate sterilizer and ultrasonic circuits.

Components Included in Starting Price

A Red, illuminated upper storage for contaminated instruments. *Optional Airglide® Open/Close available.*

B Slide-out waste module with regular and biohazard containers. *Optional Airglide® Open/Close available.*

C Ultrasonic Module with 2-drawers. *Optional pre-soak insert available.*

D Delta® retractable spray faucet and soap dispenser, undermounted 14" x 18" x 8" stainless steel sink.

E Wrap Station with two full-size wrap drawers, tape alcove and 3-instrument storage drawers.

F Drawer insert (1) for pouches and disposables.

G Autoclave Tower with sterilizer shelves that feature slide-out moisture-proof drainboard decks. Includes vented door with drainboard for overflow bottle.

H Straight and L-shaped panels between processing areas.

I Electric chase with wiring system including 3-task lights, 2- outlets, switch and separate circuits for 2-sterilizers, ultrasonic and outlets/lights.
U.L. Hospital Grade Redundant Ground rating.

Starting Retail Price $17,061	
SC120-200R Sterilization Center (Right)	**$18,098**
SC120-200L Sterilization Center (Left)	$18,098
Options & Accessories	
029-5165-04 Airglide® system for contaminated storage	$1,076
GS1812 Glass shelves for (lighted) contaminated upper storage (set of 4)	$123
GI4400 Clear windows in lieu of red/blue (set of 4)	Included
029-5165-07 Airglide® system for waste module	$955
PS1613 Presoak insert (hold 3 full-size cassettes)	$428
PS1624 Presoak basket (cassette size)	$228
GS2812 Glass shelves for (lighted) wrap station upper storage (set of 4)	$187
UBS1830-U Drop-down ultrasonic module in lieu of standard recessed module deduction.	Included
Sink Upgrades	
IS-22B Integrated solid surface sink upgrade	Included
TM-100 Tapmaster® foot-activated faucet control	$386
9-5960 Automatic soap dispenser (wall mount)	$83
9-71001 Auto-towel disp. (above sink)	$187
PL-2410M Double glove disp. (left door above sink)	$200
IN-2091 HVE mounted on sink	$194
Color Options & Upgrades	
C120-650 Formica® or Wilsonart® laminate	$855
C120-655 Pionite® or Nevamar® laminate	$1,013
C120-660 Finished back (free-standing)	$253
C120-600 Earthstone® countertop upgrade	$381
C120-620 Laminate countertop deduction	-$1,368
Zodiaq® countertop upgrade - call for pricing.	

BACK TO CONTENTS

Artizan® ExpressionsSC96-200 Freestanding 8' Sterilizer Center

Copy-Complete-Send

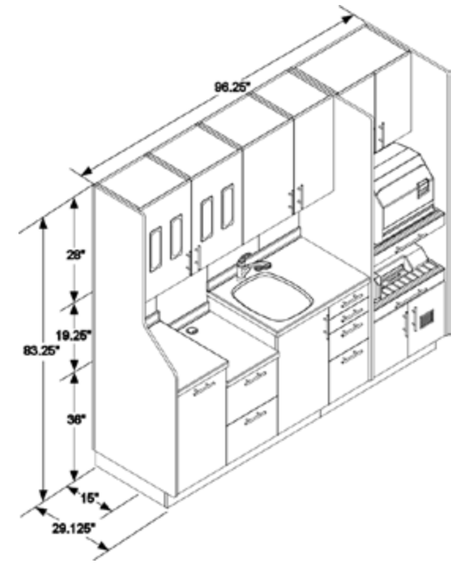

SC96-200R Sterilization Center
(Contaminated Side on Right)
Overall Dimensions: 29 1/8"D x
83 1/4"H x 96 1/4"L

Key Features

- Solid Surface Countertop with undermount stainless sink.
- Matching 3mm edgebanding
- Brushed nickel handles (new operatory style).
- Soft-close doors and drawers.
- Window inserts.
- Stainless toe-kick base panel.
- Complete wiring system including task lighting, outlets and separate sterilizer and ultrasonic circuits.

Components Included in Starting Price

A Red, illuminated upper storage for contaminated instruments. *Optional Airglide® Open/Close available.*

B Slide-out waste module with regular and biohazard containers. *Optional Airglide® Open/Close available.*

C Ultrasonic Module with 2-drawers. *Optional pre-soak insert available.*

D Delta® retractable spray faucet and soap dispenser, undermounted 14" x 18" x 8" stainless steel sink.

E Instrument drawer storage module.

F Autoclave Tower with sterilizer shelves that feature slide-out moisture-proof drainboard decks. Includes vented door with drainboard for overflow bottle.

G Straight and L-shaped panels between processing areas.

H Electric chase with wiring system including 2-task lights, 2- outlets, switch and separate circuits for 2-sterilizers, ultrasonic and outlets/lights.
U.L. Hospital Grade Redundant Ground rating.

Starting Retail Price $15,284	
SC96-200R Sterilization Center (Right)	**$16,214**
SC96-200L Sterilization Center (Left)	$16,214
Options & Accessories	
029-5165-04 Airglide® system for contaminated storage	$1,076
GS1812 Glass shelves for (lighted) contaminated upper storage (set of 4)	$123
GI4400 Clear windows in lieu of red/blue (set of 4)	Included
029-5165-07 Airglide® system for waste module	$955
PS1613 Presoak insert (hold 3 full-size cassettes)	$428
PS1624 Presoak basket (cassette size)	$228
GS1412 Glass shelves for (lighted) clean upper storage (set of 4)	$228
UBS1830-U Drop-down ultrasonic module in lieu of standard recessed module deduction.	Included
Sink Upgrades	
IS-22B Integrated solid surface sink upgrade	Included
TM-100 Tapmaster® foot-activated faucet control	$386
9-5960 Automatic soap dispenser (wall mount)	$83
9-71001 Auto-towel disp. (door above sink)	$187
PL-2410M Double glove disp. (door above sink)	$200
IN-2091 HVE mounted on sink	$194
Color Options & Upgrades	
C96-650 Formica® or Wilsonart® laminate	$733
C96-655 Pionite® or Nevamar® laminate	$889
C96-660 Finished back (free-standing)	$194
C96-600 Earthstone® countertop upgrade	$334
C96-620 Laminate countertop deduction	-$1,034
Zodiaq® countertop upgrade - call for pricing.	

BACK TO CONTENTS

Artizan® Expressions Custom Modular Components

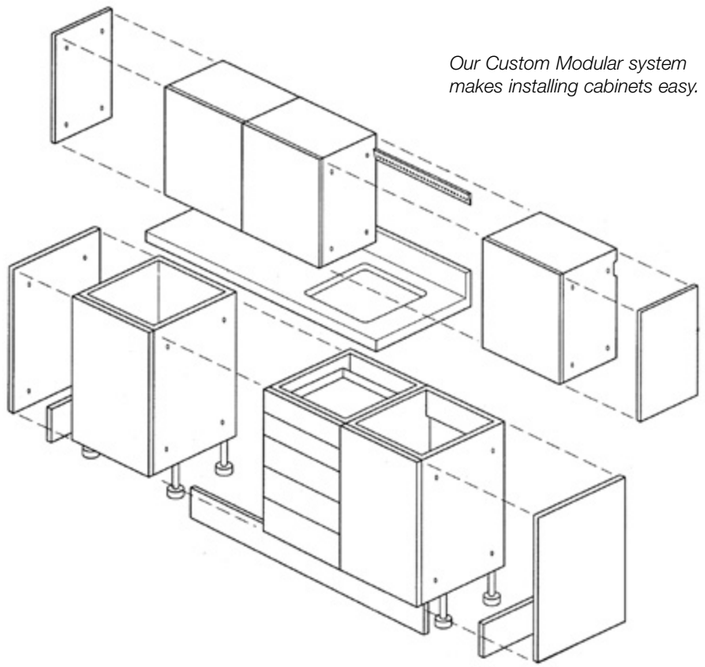

Our Custom Modular system makes installing cabinets easy.

Item Code Reference Chart

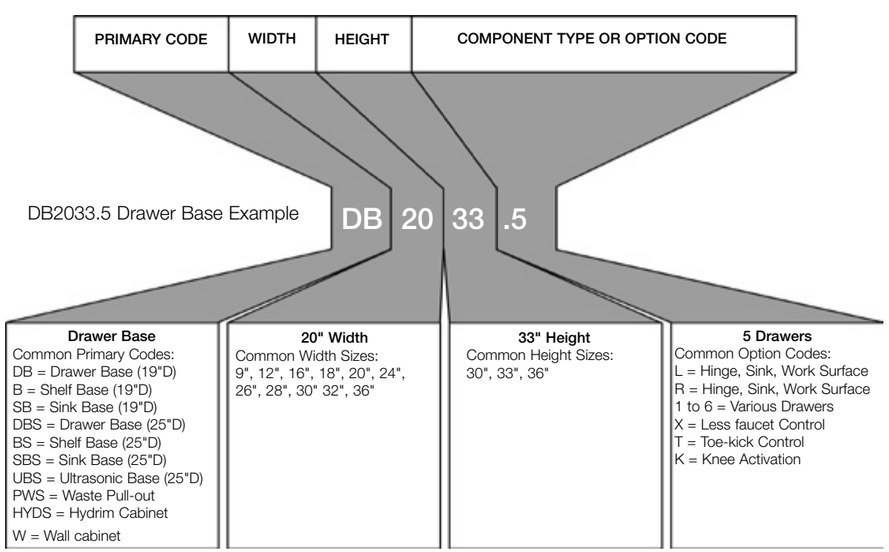

BACK TO CONTENTS

Artizan® Expressions Sterilization Modules

Base Modules

36" Sink Base Module
* Double Basin Sink
SBS3636-7 **$2,255**
SBS3636-7T **$2,641**
Dim: 36"W x 36"H x 25"D

28" Sink Base Module
* Large Single Basin Sink
SBS2836-8 **$2,091**
SBS2836-8T **$2,479**
Dim: 28"W x 36"H x 25"D

20" Sink Base Module
* Medium Single Basin Sink
SBS2039-10 **$1,855**
SBS2039-10T **$2,241**
Dim: 20"W x 36"H x 25"D

Sterilization modules have the same new handle style and color options as the freestanding operatory cabinets. Other features include laminate toe-kick and soft-close doors and drawers.

Sink Areas Include
- Delta® Spray Faucet
- Pump Soap Dispenser

Faucet Function
X - Less Faucet Control
T - Toe-Kick Control

Storage Module
BS1636 **$955**
16"W x 36"H x 25"D

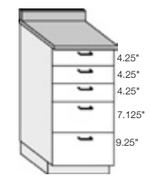

5-Drawer Module
DBS1636-5 **$1,323**
DBS1636-5SS **$1,565**
16"W x 36"H x 25"D

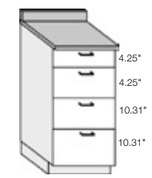

4-Drawer Module
DBS1636-4 **$1,200**
DBS1636-4SS **$1,423**
16"W x 36"H x 25"D

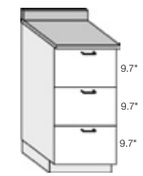

3-Drawer Module
DBS1636-3 **$1,076**
DBS1636-3SS **$1,280**
16"W x 36"H x 25"D

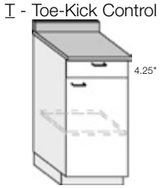

1-Drawer Module
DBS1636-1 **$1,052**
DBS1636-1SS **$1,072**
16"W x 36"H x 25"D

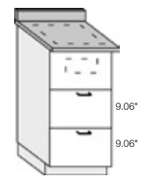

Recessed Ultrasonic Module
UBS1836 **$1,171**
UBS1836SS **$1,237**
18"W x 36"H x 25"D

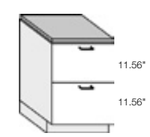

Tabletop Ultrasonic Module
UBS1830 **$1,024**
UBS1830SS **$1,151**
18"W x 30"H x 25"D

Hydrim Module
* Moisture-Proof Shelf
HYDS2636 **$1,324**
26"W x 36"H x 25"D

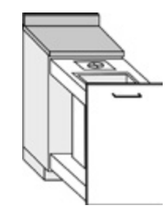

Waste Module
PWS1836 **$1,552**
18"W x 36"H x 25"D

Includes Regular & Bio waste Containers

Airglide®
kick Open/Close
029-5165-07 **$955**

Wall Modules

28"H Wall Module (Width)
W1228.15 (12"W) **$478**
W1628.15 (16"W) **$480**
W1828.15 (18"W) **$504**
W2028.15 (20"W) **$527**

28"H Wall Module (Width)
W2428.15 (24"W) **$755**
W2828.15 (28"W) **$808**
W3228.15 (32"W) **$855**
W3628.15 (36"W) **$902**

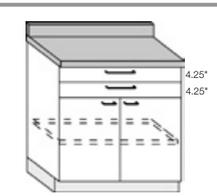

Wrap Drawer Module
DBS2836-2 **$1,486**
DBS2836-2SS **$1,643**
28"W x 36"H x 25"D

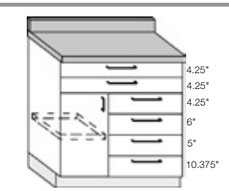

Wrap & Storage Module
DBS2836-2X **$1,685**
DBS2836-2XSS **$1,939**
28"W x 36"H x 25"D

Miscellaneous

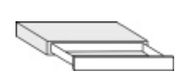

Desk Drawer (Width)
PDS2406 **$439**
PDS2806 **$486**
PDS3206 **$522**

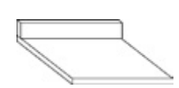

Postform Countertop
Call for Pricing
Square Edge Countertop
Call for Pricing

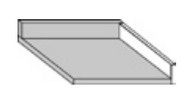

End Splash
P25R (Right) **$74**
P25L (Left) **$74**

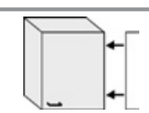

End Filler N/C
Base: 29 1/4" x ____
20" Wall: 20" x ____
30" Wall: 28" x _____

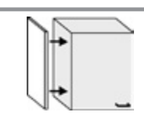

End Panels
Base: AP2436 **$160**
20" Wall: AP1520 **$111**
30" Wall: AP1530 **$123**

BACK TO CONTENTS

Artizan® Expressions Sterilization Modules

Sterilization Towers

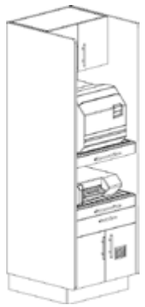

Sterilizer & Handpiece Sterilizer Tower with Wrap Drawers
- Slide-Out Sterilizer Shelves
- Slide-out Handpiece Sterilizer Shelf
- Vented Storage
- 1-Wrap Drawers

ST84-A **$3,622**
27 1/2"W x 83 1/4"H x 29 1/8"D

Double Sterilizer Tower
- 2-Slide-Out Sterilizer Shelves

ST84-B **$3,434**
27 1/2"W x 83 1/4"H x 29 1/8"D

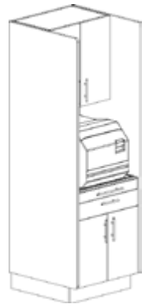

Sterilizer & Wrap Tower
- Wrap Drawers (1)
- Slide-Out Sterilizer Shelf

ST84-C **$3,500**
27 1/2"W x 83 1/4"H x 29 1/8"D

Sterilizer & Handpiece Sterilizer Tower
- Slide-Out Sterilizer Shelf
- Slide-Out Handpiece Sterilizer Shelf
- Bottle Vented Storage

ST84-D **$3,500**
27 1/2"W x 83 1/4"H x 29 1/8"D

*Notes: Towers feature our slide-out **moisture-proof** drainboard sterilizers shelves and storage compartment. Separate prewired outlets are also provided for sterilizers.*

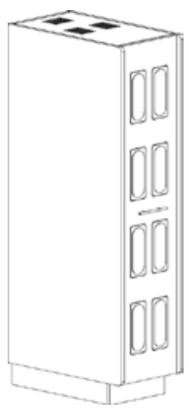

Rotating Storage Pantry
- 5-adjustable Basket Racks
- Lighted interior
- Clear window inserts

CT-1684 **$3,347**
GI4300 Blue inserts (8)
Included

Note - 6" clearance required on open end/s for proper rotation.

16"W x 83 1/4"H x 29 1/8"D

Accessories

Auto-Soap Dispenser
9-5960 **$83**
Accepts Ultra-Clenz Soap
Uses 4-D-Cell Batteries

Solid Surface Countertop Upgrade (25"Depth)
SST25 __ __ (size)
Call for Pricing

Slimline 12" Task Light
9-TL12W **$148**
Includes fluorescent tube

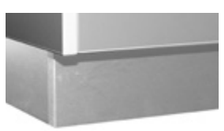

Stainless Laminate Toe-Kick
STK4__ __ (Size)
Call for Pricing

Combination Waste/Sharps Chute
PL-2326U unmounted **$311**
PL-2326M mounted **$328**
9-185 Bio container #185 **$20**

Auto-Towel Dispenser
Accepts 8" roll towels
9-71001 **$187**
Uses 4-D-cell batteries
9-71002 **$248**
Includes AC adapter

Waste Chutes w/ Bag Collar
PL-2325U 4" unmounted **$136**
PL-2325M 4" mounted **$153**
PL-2340 4" Biohazard lid **$50**
PL-2320U 6" unmounted **$171**
PL-2320M 6" mounted **$187**
PL-2412 6" Biohazard lid **$57**

BACK TO CONTENTS

Artizan® Expressions Operatory Modules

Base Modules

28" Sink Base Module
SB2833-X **$1,961**
SB2833-T **$2,271**
28"W x 33"H x 19"D

16" Sink Base Module
SB1633-X **$1,861**
SB1633-T **$2,170**
16"W x 33"H x 19"D

Note
Available only with stainless base upgrade.

28" Round Sink Module
RSB2833-L (R) X **$2,255**
RSB2833-L (R) T **$2,581**
28"W x 33"H x 19"D

Sink Areas Include
- Spray Faucet & Soap Dispenser
- Undermount SS Sink

Faucet Function
X - Less Faucet Control
T - Toe-Kick Control

Operatory modules have the same new handle style and color options as the freestanding operatory cabinets.

Note
Available only with stainless base upgrade.

Round Storage Module
RB1233-R (Right) **$1,052**
RB1233-L (Left) **$1,052**
12"W x 33"H x 19"D

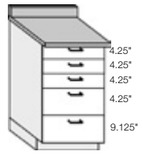

5-Drawer Module
DB1633-5 **$1,300**
DB1633-5SS **$1,504**
16"W x 33"H x 19"D

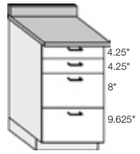

4-Drawer Module
DB1633-4 **$1,171**
DB1633-4SS **$1,356**
16"W x 33"H x 19"D

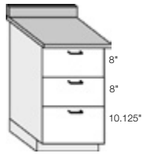

3-Drawer Module
DB1633-3 **$1,052**
DB1633-3SS **$1,242**
16"W x 33"H x 19"D

Storage Module
B1633 **$931**
16"W x 33"H x 19"D

Wall Modules

Single Door Wall Module
W1220.15 (12"W) **$398**
W1620.15 (16"W) **$457**
W1820.15 (18"W) **$475**
W2020.15 (20"W) **$497**

Double Door Wall Module
W2420.15 (24"W) **$697**
W2820.15 (28"W) **$744**
W3220.15 (32"W) **$790**
W3620.15 (36"W) **$843**

Dispenser Modules

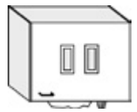

C or Single Fold Towels
5 Oz. Plastic Cups

With Adjustable Shelf
W2020-100 **$616**
With Single Glove
W2020-200 **$790**
With Double Glove
W2020-300 **$831**
Dim: 21 1/2"W x 20"H x 10"D

Automatic 8" Roll Towels
5 Oz. Plastic Cups

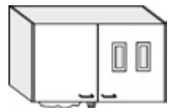

With Single Glove
W2820-200 **$1,147**
With Double Glove
W2820-300 **$1,194**
Requires 4-D cell batteries
Dim: 29 1/2"W x 20"H x 12"D

Miscellaneous

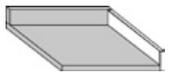

End Splash
P19R (Right) **$74**
P19L (Left) **$74**

Desk Drawer (Width)
PD2406 **$392**
PD2806 **$451**
PD3206 **$497**

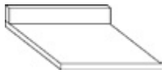

Postform Countertop
Call for Pricing
Square Edge countertop
Call for Pricing

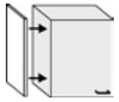

Accent Panels
Base: AP1833 **$128**
Wall: AP1520 **$111**

Stainless Steel base (Upgrade)
SSB17__ __ (Size)
Call for Pricing

Top Upgrades

Gooseneck Faucet (Upgrade)
FS-711C **$158**
FS-711CS (with soap dispenser) **$233**

Undermount Sink Options
For Solid Surface Top Upgrades
Stainless Steel - **Standard** (Shown)
FS-510W White Porcelain **$233**
FS-5700 White Solid Surface **$480**

BACK TO CONTENTS

Artizan® Expressions Mobile Cabinets

Mobile cabinets have the same new handle style and color options as the freestanding operatory cabinets.

Mobile With Sliding Top

Includes:
- Sliding Side to Side or Front to Back Top
- Pull Handle
- Storage Well & Cord Grommet

Dimensions:
21 1/2"W x 19 1/2"D x 31"H
Storage Well: 8"D

Starting Retail Price $1,350	
EMS1820 Side to Side Sliding Top	**$1404**
EMF1820 Front to Back Sliding Top	**$1,404**
Options & Upgrades	
1820-650 Formica® or Wilsonart® laminate	$70
1820-655 Pionite® or Nevamar® laminate	$88
1820-620 Laminate counter-top deduction	-$238
1820-600 Earthstone counter-top upgrade	$95
EMS1820SS Stainless steel drawer upgrade	$194
EMF1820SS Stainless steel drawer upgrade	$194

Mobile With Slide-Out Work Surface

Includes:
- Fixed Top
- Pull Handle
- Slide-Out Left or Right Work Surface
- Fold-Down Drawer

Dimensions:
21 1/2"W x 19 1/2"D x 33 1/4"H

Starting Retail Price $1,350	
EML1820 Left Side Work Surface	**$1,404**
EMR1820 Right Side Work Surface	**$1,404**
Options & Upgrades	
1820-650 Formica® or Wilsonart® laminate	$70
1820-655 Pionite® or Nevamar® laminate	$88
1820-620 Laminate counter-top deduction	-$238
1820-600 Earthstone counter-top upgrade	$95
EML1820SS Stainless steel drawer upgrade	$194
EMR1820SS Stainless steel drawer upgrade	$194

Doctor's Drawer Mobile

Includes:
- Fixed Top
- Pull Handle

Dimensions:
21 1/2"W x 19 1/2"D x 29 3/4"H

Starting Retail Price $1,367	
EMD1820-4 Drawer Mobile (shown)	**$1,422**
Options & Upgrades	
1820-650 Formica® or Wilsonart® laminate	$70
1820-655 Pionite® or Nevamar® laminate	$88
1820-620 Laminate counter-top deduction	-$238
1820-600 Earthstone counter-top upgrade	$95
EMD1820SS Stainless steel drawer upgrade	$219

CABINET COLOR/S

EDGEBANDING COLOR

COUNTERTOP COLOR

Total $ _____ x (qty) = _____

DENTIST NAME

SIGNATURE

DEALER CITY

CONTACT

Artizan® Expressions X-Ray Pass Through

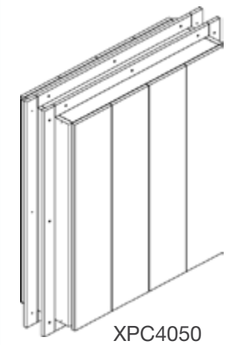

XPC4050

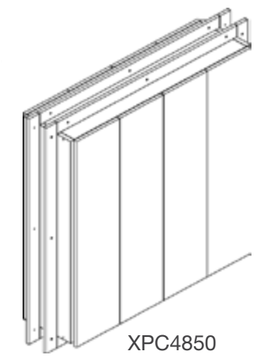

XPC4850

Included in Starting Price

- Double bi-fold doors on both sides.
- Industrial grade mounting hinges.
- Sturdy 1" thick cabinet sides, top and bottom.
- Optional trim kit available.

XPC4050 X-ray pass through (40" I.D. Width)	**$1,715**
XPC4850 X-ray pass through (48" I.D. Width)	**$1,838**
Options & Upgrades	
TK-40 Trim kit for XPC4050 cabinet	$328
TK-48 Trim kit for XPC4850 cabinet	$328
XPC-650 Formica® or Wilsonart® laminate	$106
XPC-655 Pionite® or Nevamar® laminate	$136
Non-standard color charge	$106
Lead lining - call for pricing.	

CABINET COLOR/S

EDGEBANDING COLOR

A single x-ray can serve two exam rooms.

XPC4050 O.D. Dimensions: 42"W x 52"H x 14 3/4"D
XPC4050 I.D. Dimensions: 40"W x 50"H x 13"D

XPC4850 O.D. Dimensions: 50"W x 52"H x 14 3/4"D
XPC4850 I.D. Dimensions: 48"W x 50"H x 13"D

Note - The recommended rough opening should be at least 3/8" larger than the O.D. dimensions of the cabinet and start at a minimum of 39" off the finished floor.

Refer to our rough-In specifications for additional size and rough opening construction information.

Note: Expect orders to be on an extended lead time.

Preva DC (Parked)

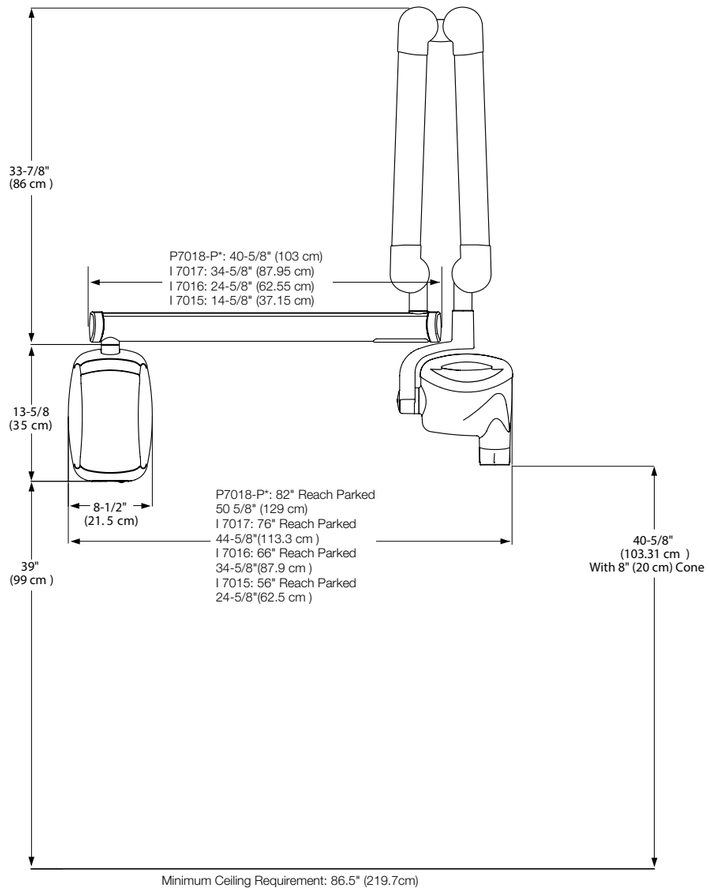

*Preva 82" arm length sold exclusively with double stud mount.

Preva DC (Pass-through)

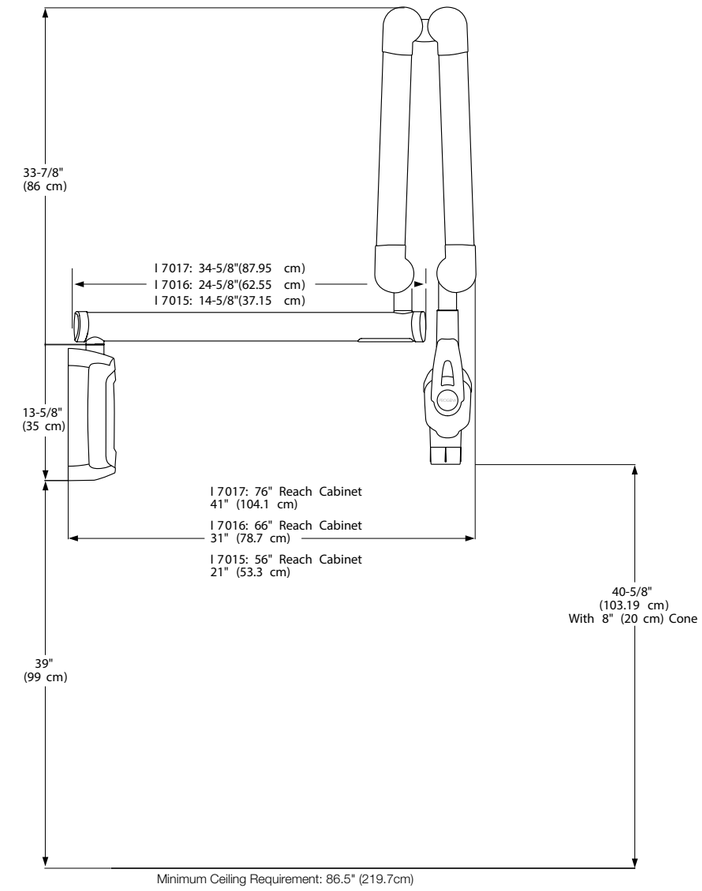

82" arm length not recommended for cabinet mount

Preva DC (Mobile)

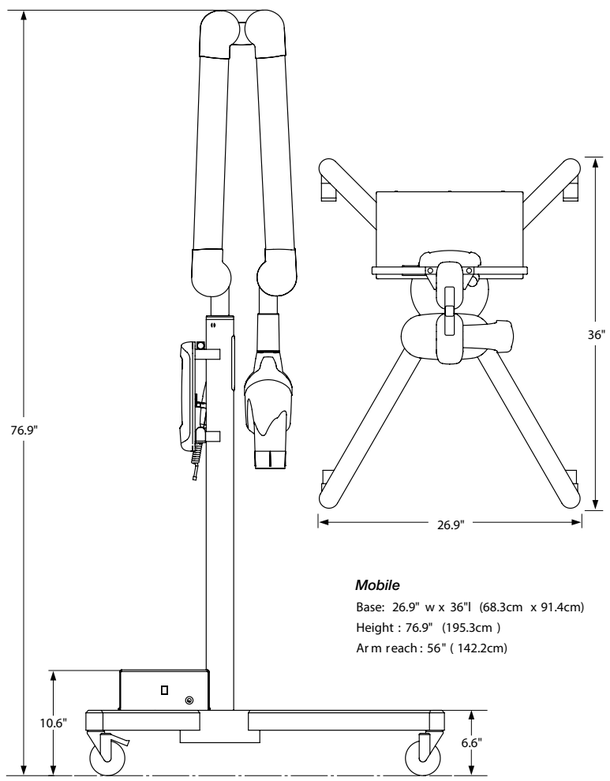

Mobile

Base: 26.9" w x 36"l (68.3cm x 91.4cm)
Height : 76.9" (195.3cm)
Arm reach : 56" (142.2cm)

Dimensions: Dental Chairs

The Elevance® Dental Chair

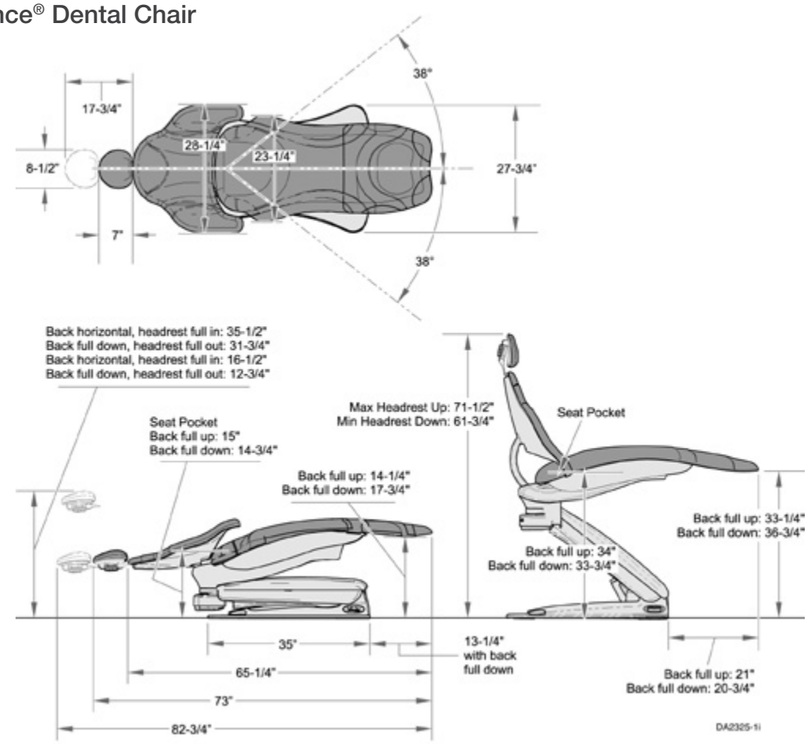

The UltraComfort® Dental Chair

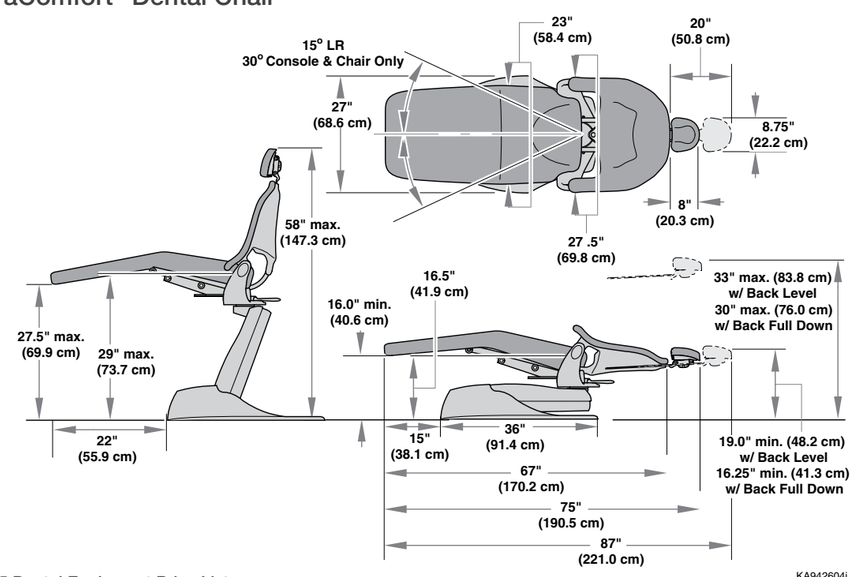

Dimensions: Elevance™ Delivery Units

Elevance™ Delivery Unit - Console Mounted

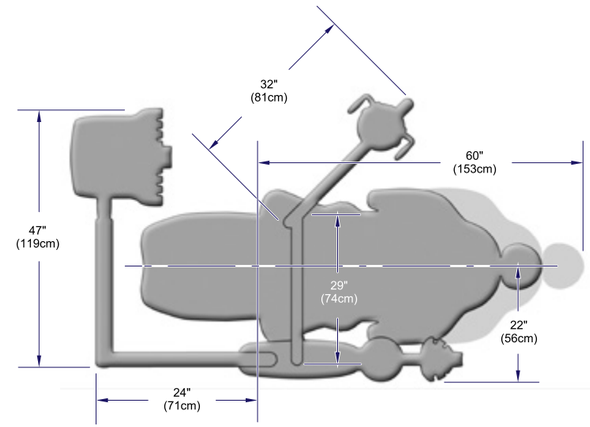

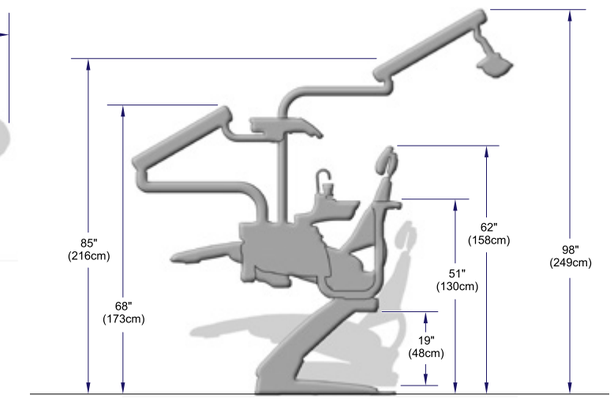

Elevance™ Delivery Unit - LR Mounted

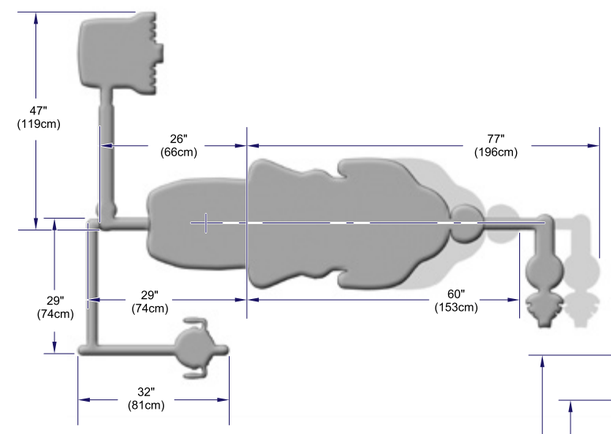

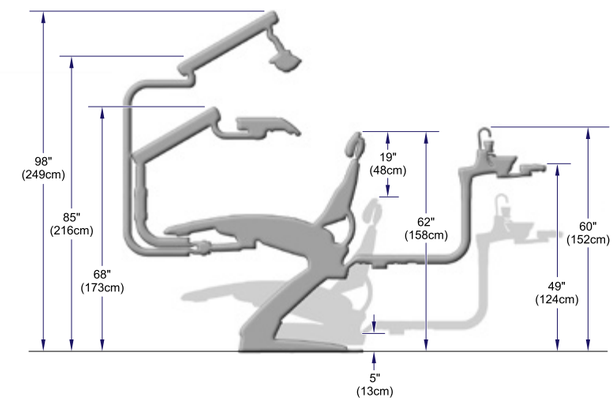

Dimensions: Delivery Unit - Procenter and International Style

Console Mounted on Ultra Chair

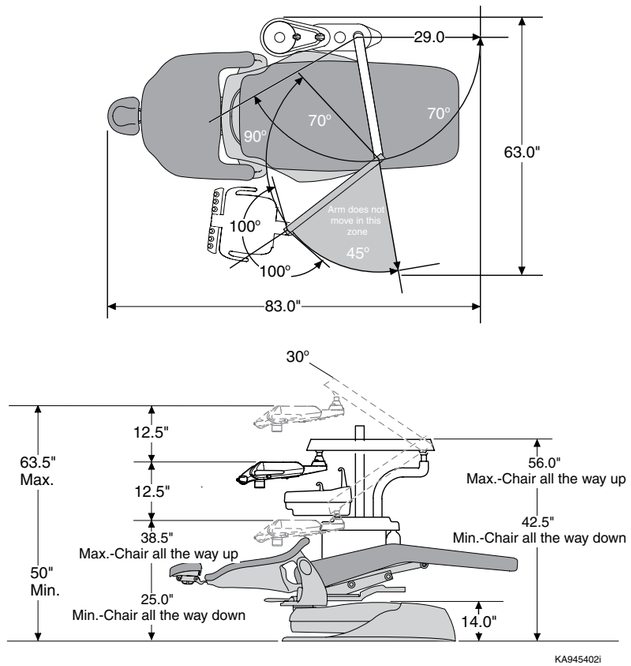

LR Mounted on Ultra Chair

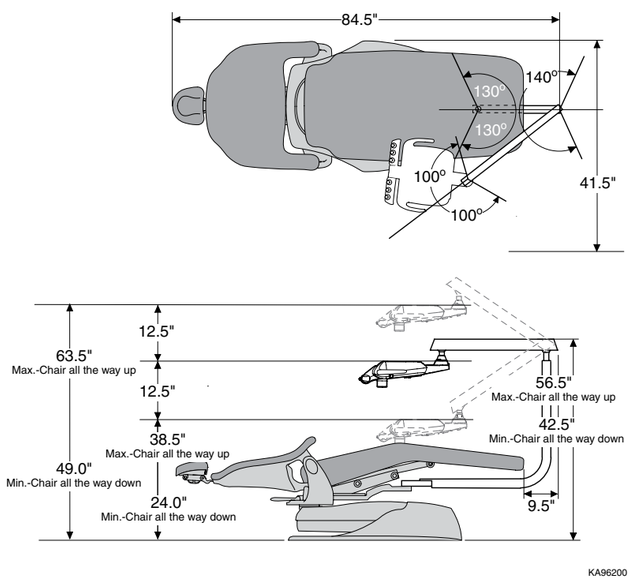

Dimensions: Delivery Unit - Wall/Cabinet Mounted

Procenter

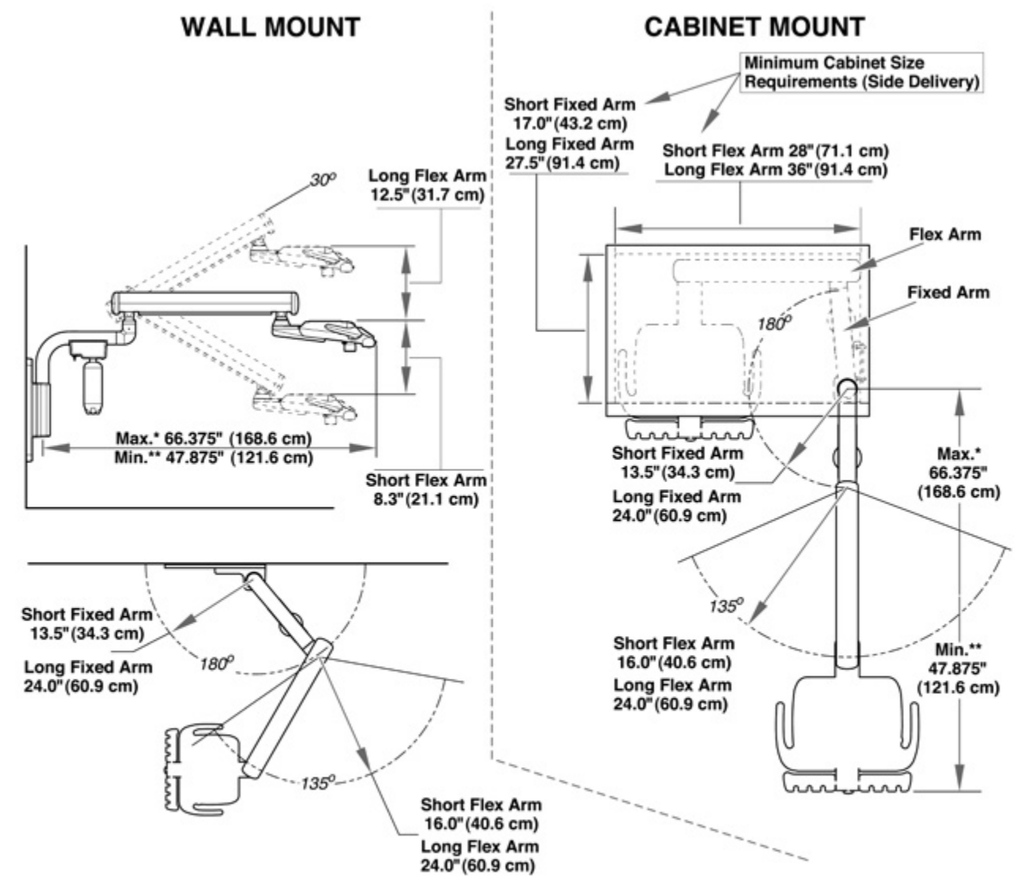

*Measurement w/ long fixed arm & long flex arm (Standard w/ wall mounted unit)

**Measurement w/ short fixed arm & short flex arm (Standard w/ cabinet mounted unit)

Note:
Product can be configured to use either fixed arm w/ either flex arm

Dimensions: Procenter

Cuspidor - Rear Mounted on Ultra Chair

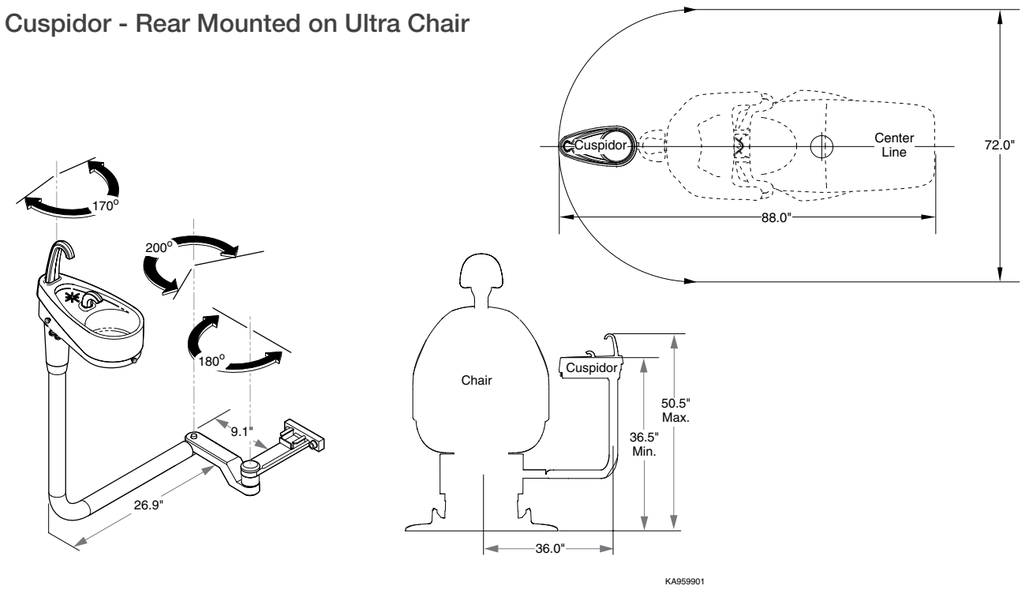

Assistant's Unit - Rear Mounted on Ultra Chair

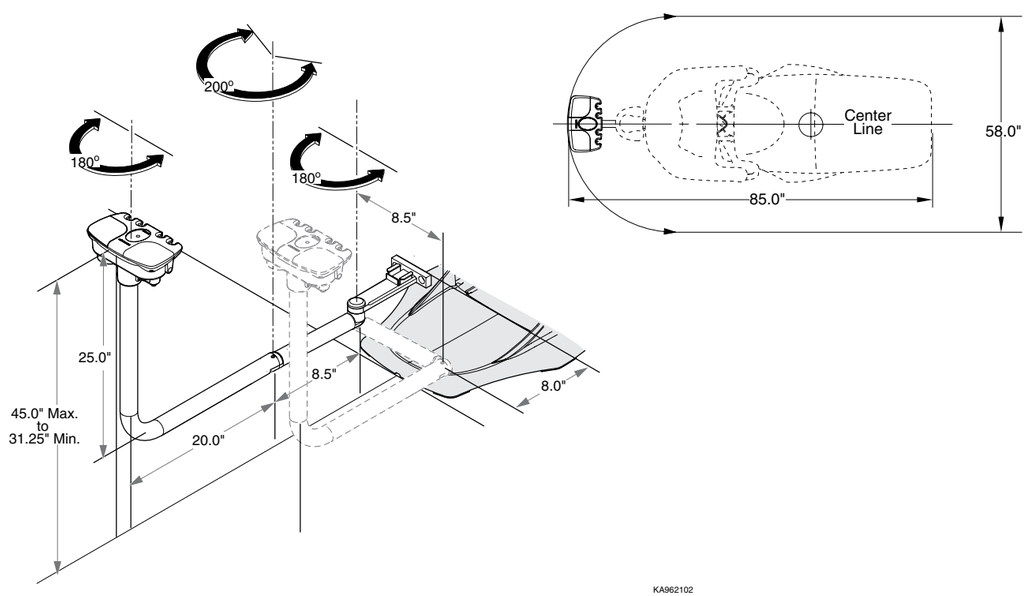

Dimensions: Operating Lights

Console Mounted

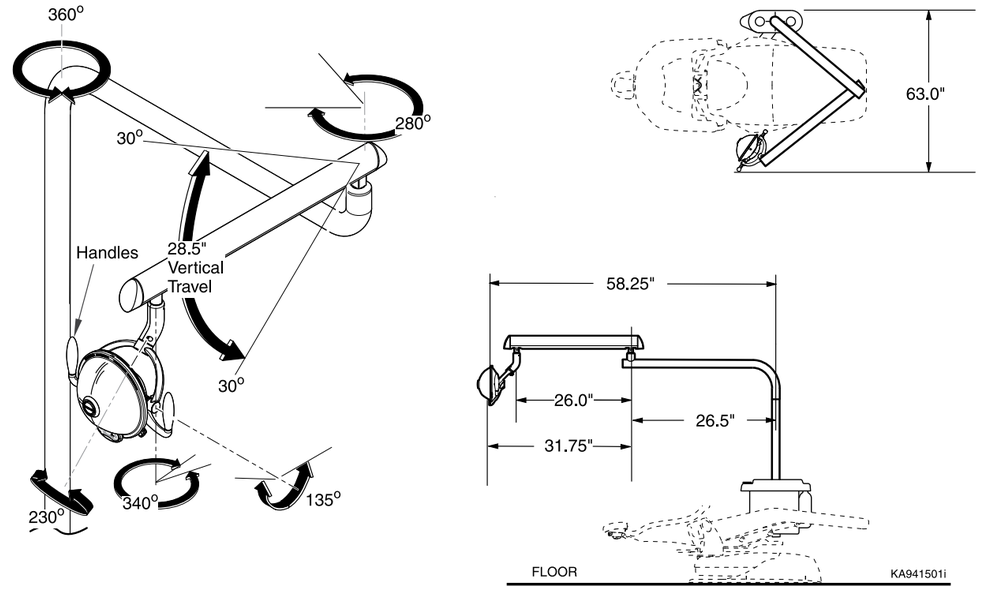

LR Mounted on Ultra Chair

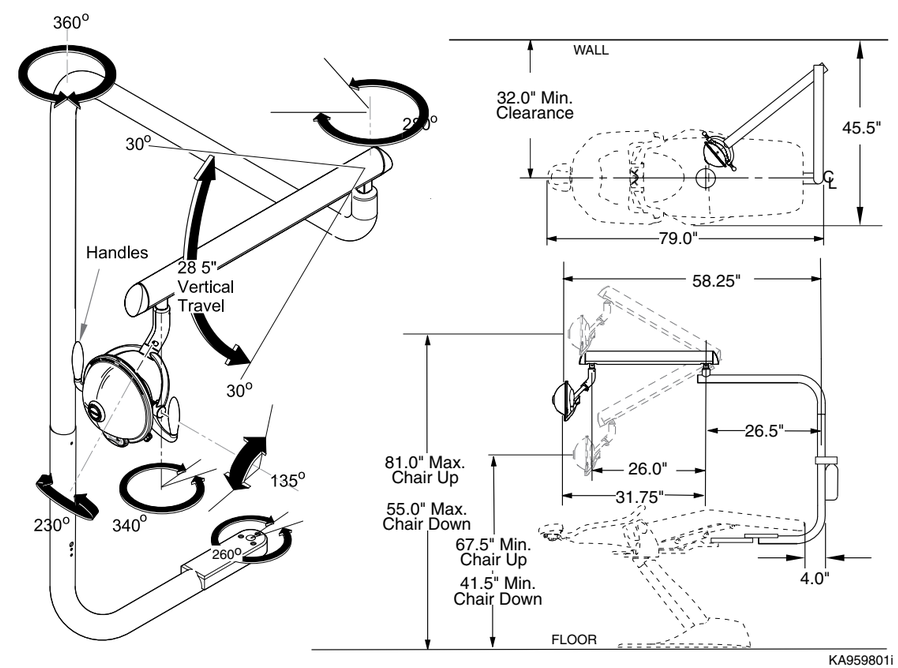

Dimensions: Operating Light - Wall/Cabinet Mounted

Wall Mounted Light

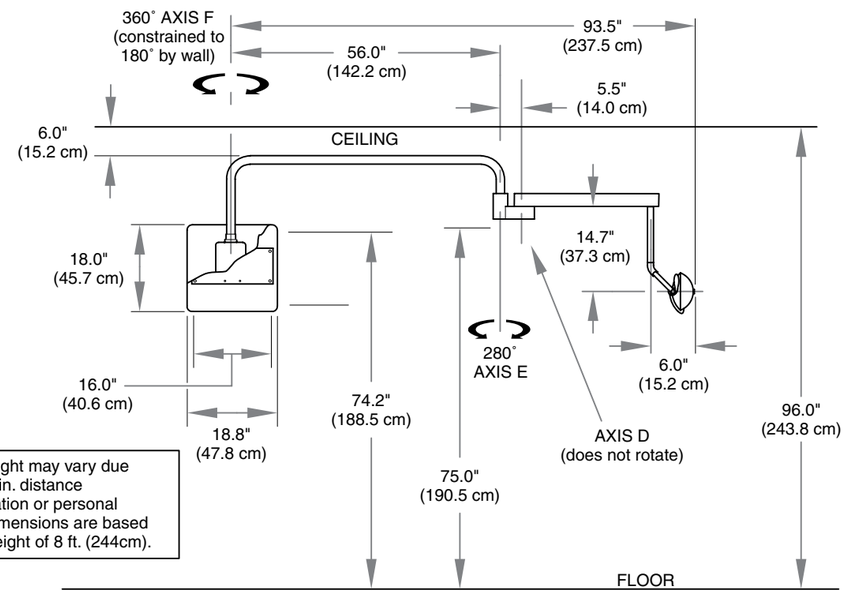

Recommended height may vary due to 6 in. (15.2cm) min. distance required for installation or personal preferences. All dimensions are based on a min. ceiling height of 8 ft. (244cm).

Cabinet Mounted Light

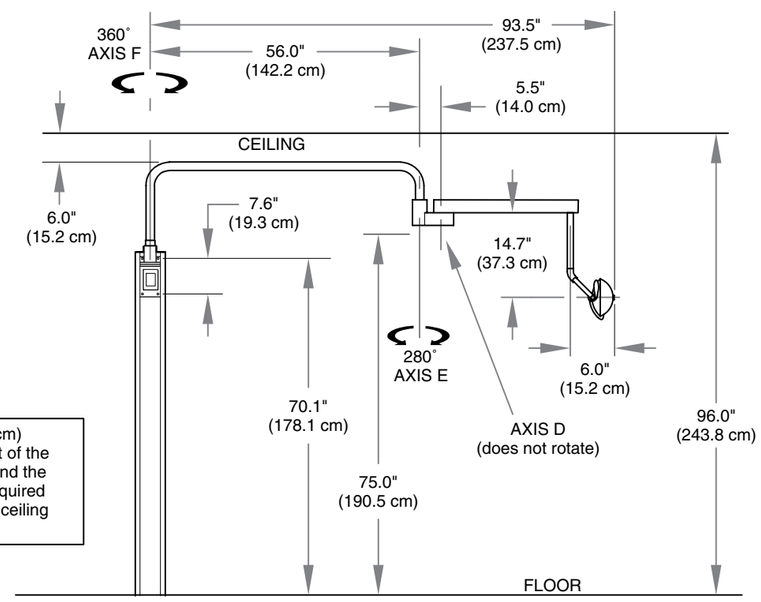

Recommended min. 8 ft. (244cm) ceiling height due to the height of the central free standing cabinet and the 6 in. (15.2cm) min. distance required between the light arm and the ceiling for installation.

KA995600i

Dimensions: Track Light Monitor

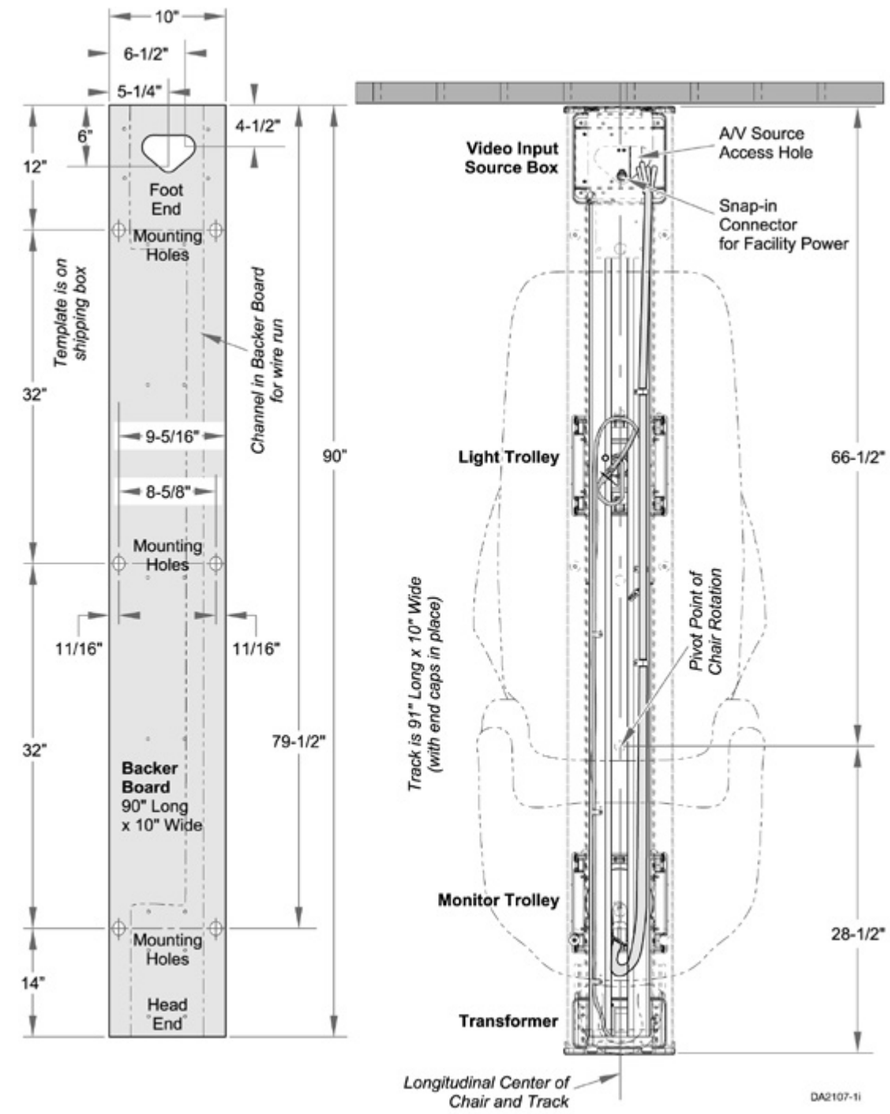

Dimensions: Track Light Monitor

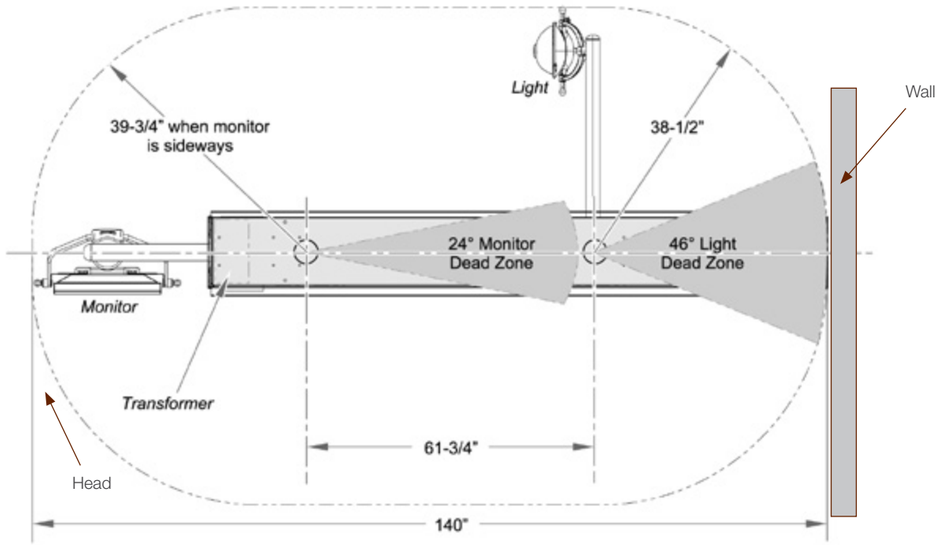

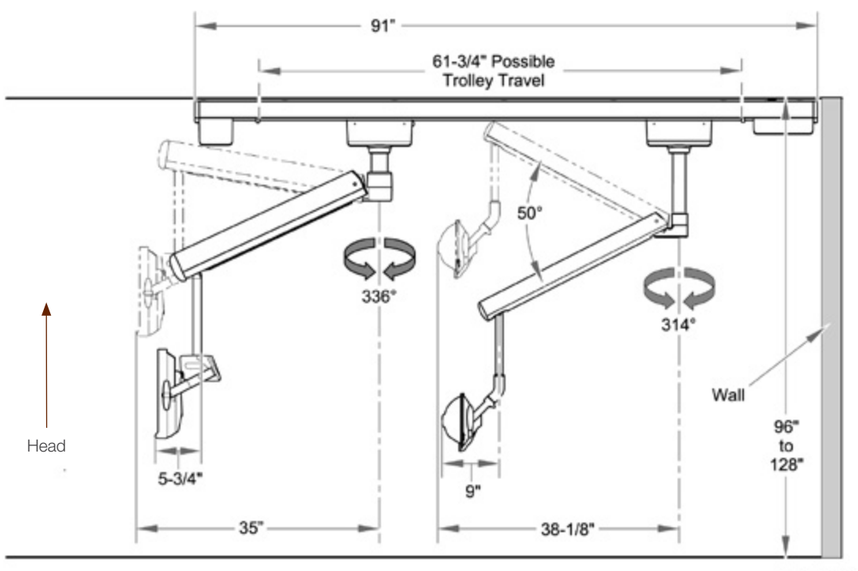

DA2104-1i

Dimensions: Operating Lights

Track Mounted

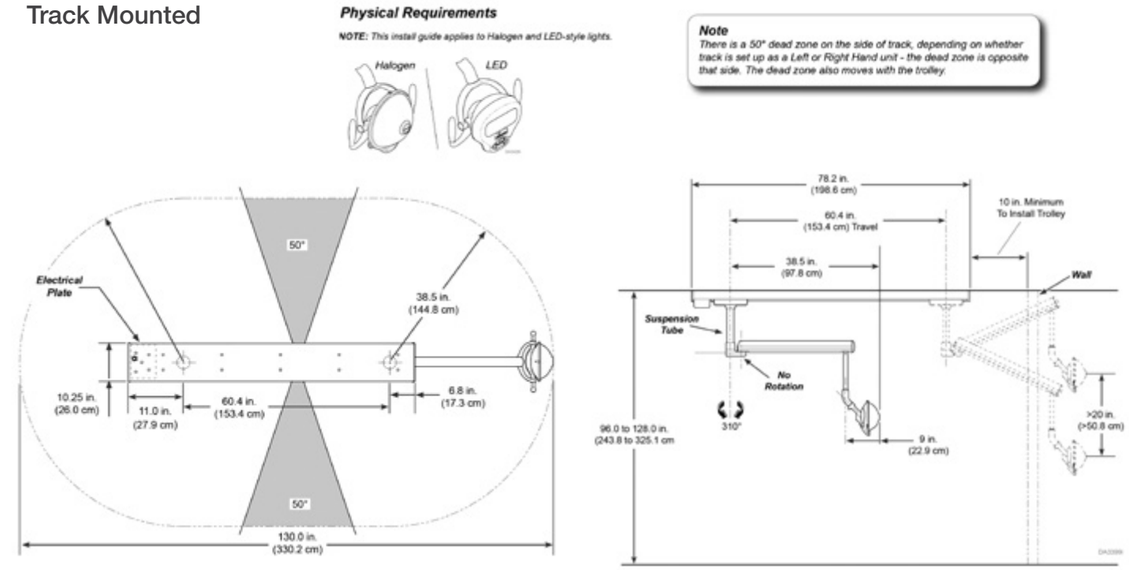

Ceiling Mounted

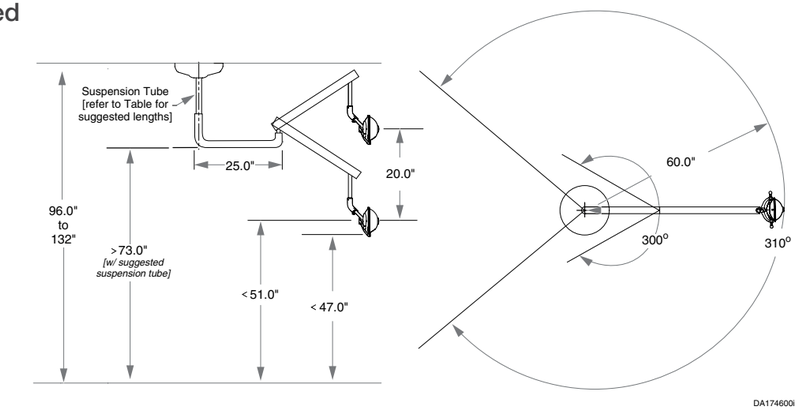

Track Mounted

Mounting Height	Suspension Tube Kit *[includes wire harness(es), & hardware]*	Suspension Tube Length
96 to 98 in. (243.8 to 248.9 cm)	153651-002	14.25 in. (36.2 cm)
99 to 102 in. (251.5 to 259.1 cm)	153651-003	18.25 in. (46.3 cm)
103 to 106 in. (261.6 to 269.2 cm)	153651-004	22.25 in. (56.5 cm)
107 to 110 in. (271.8 to 279.4 cm)	153651-005	26.25 in. (66.7 cm)
111 to 114 in. (281.9 to 289.5 cm)	153651-006	30.25 in. (76.8 cm)
115 to 118 in. (292.1 to 299.7 cm)	153651-007	34.25 in. (87.0 cm)
119 to 122 in. (302.3 to 309.9 cm)	153651-008	38.25 in. (97.1 cm)
123 to 126 in. (312.4 to 320.0 cm)	153651-009	42.25 in. (107.3 cm)
>126 in. (320.0 cm)	153651-010	46.25 in. (117.5 cm)

Ceiling Mounted

Mounting Height	Suspension Tube Kit *[includes wire harness(es), & hardware]*	Suspension Tube Length
96 to 98 in. (243.8 to 248.9 cm)	153936-001	10.25 in. (26.0 cm)
99 to 102 in. (251.5 to 259.1 cm)	153936-002	14.25 in. (36.2 cm)
103 to 106 in. (261.6 to 269.2 cm)	153936-003	18.25 in. (46.3 cm)
107 to 110 in. (271.8 to 279.4 cm)	153936-004	22.25 in. (56.5 cm)
111 to 114 in. (281.9 to 289.5 cm)	153936-005	26.25 in. (66.7 cm)
115 to 118 in. (292.1 to 299.7 cm)	153936-006	30.25 in. (76.8 cm)
119 to 122 in. (302.3 to 309.9 cm)	153936-007	34.25 in. (87.0 cm)
123 to 126 in. (312.4 to 320.0 cm)	153936-008	38.25 in. (97.1 cm)
127 to 130 in. (322.6 to 330.2 cm)	153936-009	42.25 in. (107.3 cm)
>130 in. (>330.2 cm)	153936-010	46.25 in. (117.5 cm)

Dimensions: Operating Light - Universal Mount

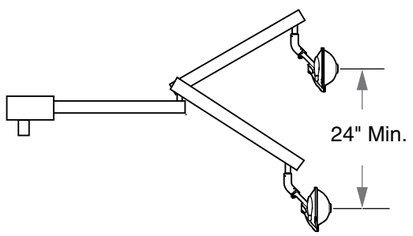

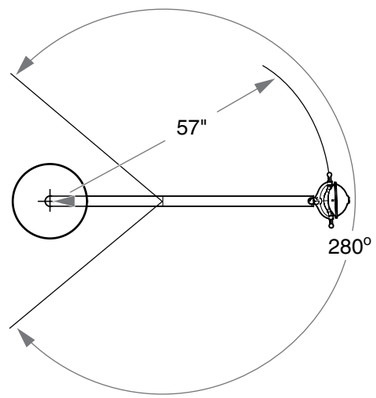

KA989900i

NOTE
The universal light can be installed into any 1 3/8" or 1 7/8" (I.D.) post.

Dimensions: Junction Boxes

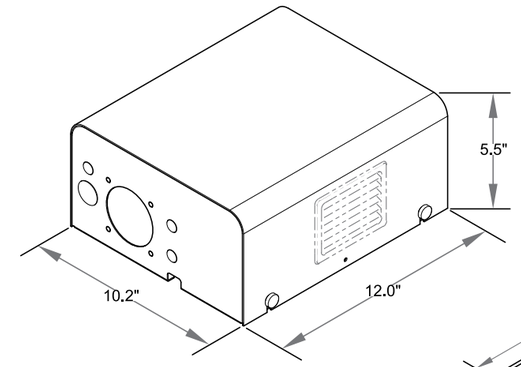

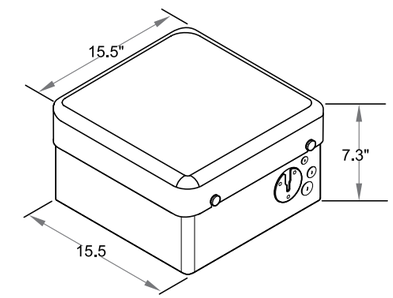

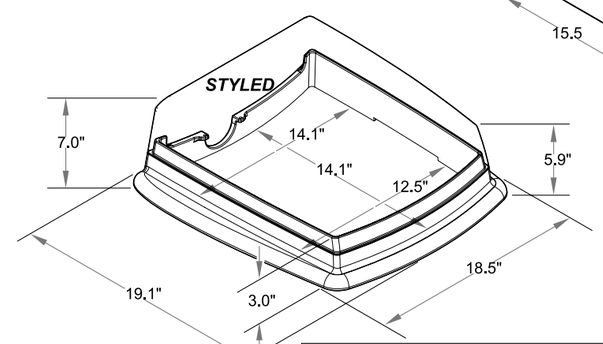

When positioned against the base at the foot end of the Midmark Dental Chair, the Styled junction box adds approximately 5.0" to the overall length of the chair.

DA174500I

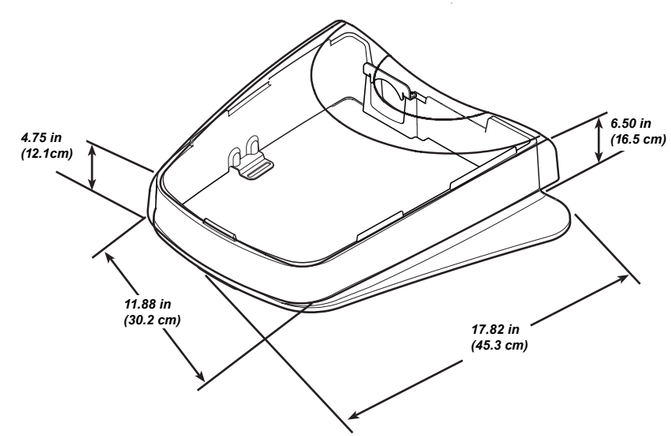

Dimensions: Carts

Asepsis® 21 Left/Right Duo Cart

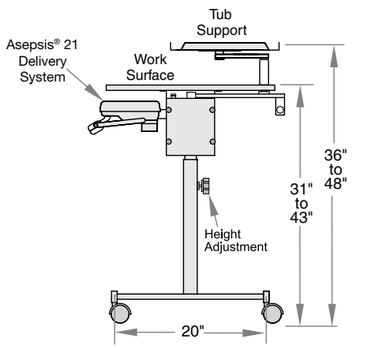

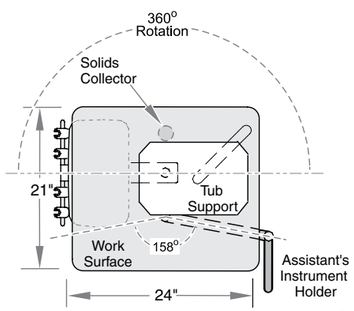

DA175200i

Assistant's Cart

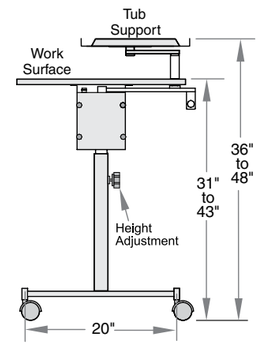

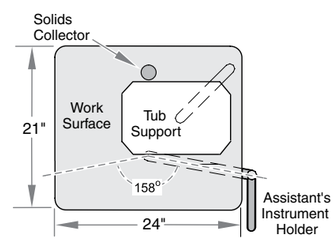

DA175100i

Asepsis 21® Doctor's Cart

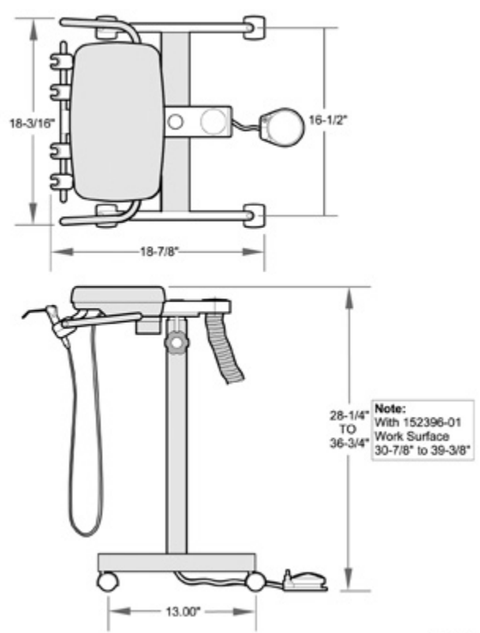

DA175001i

Dimensions: Midmark 641 Oral Surgery Chair

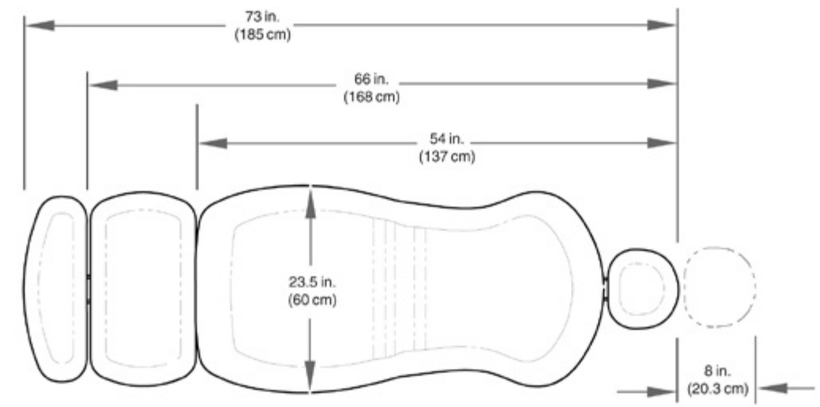

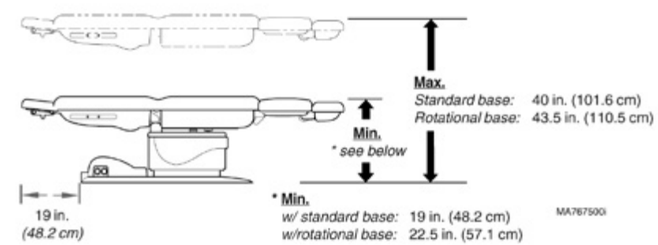

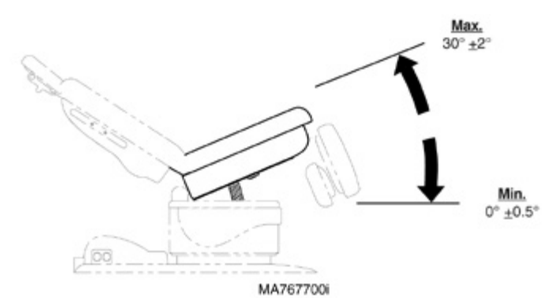

Dimensions: Midmark Lights

Midmark 255 Procedure Light Ceiling Mounted

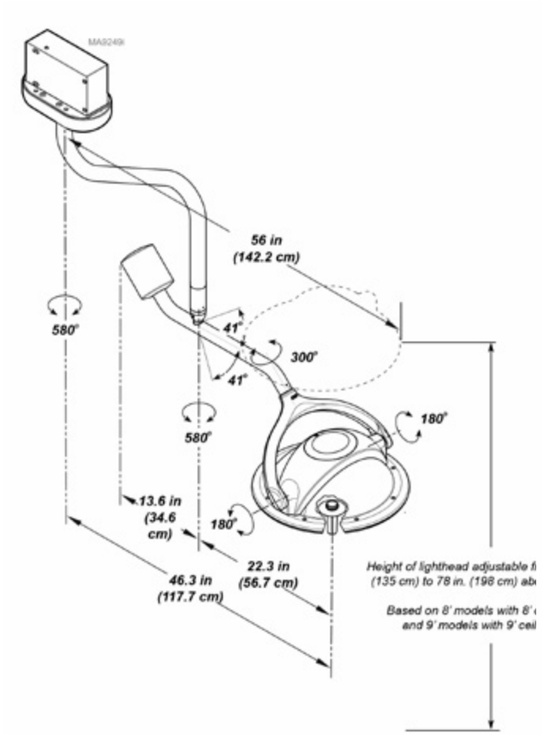

Midmark 255 Mobile Procedure Light

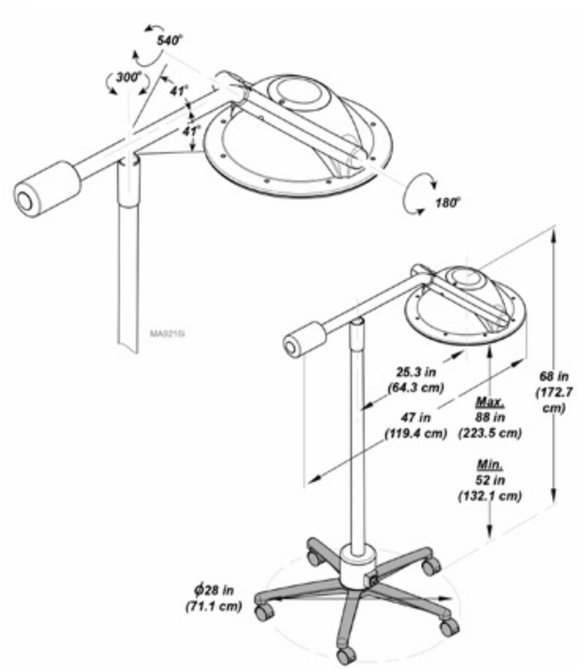

Dimensions: Soniclean® Ultrasonic Cleaner

Soniclean® Ultrasonic Cleaner

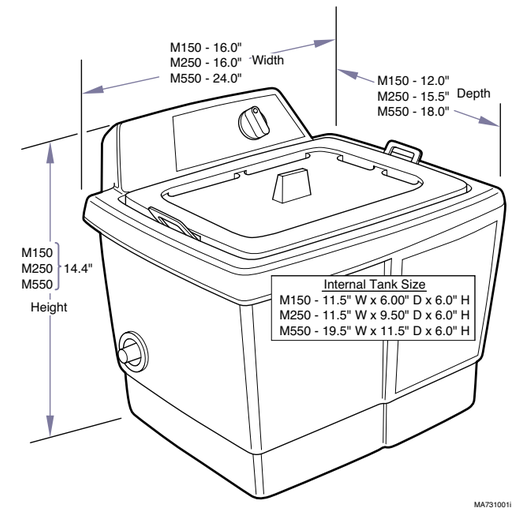

Midmark M9 and M11 UltraClave® Sterilizers

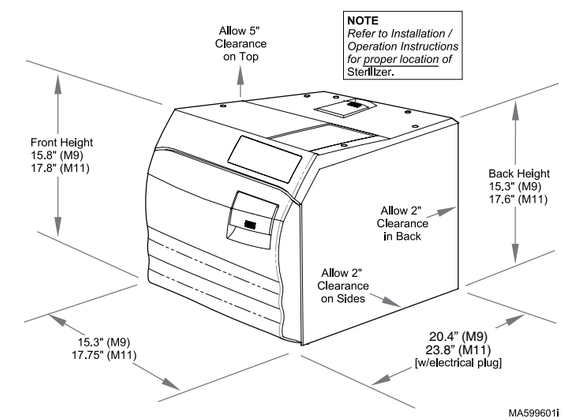

Midmark M3 UltraFast® Automatic Sterilizer

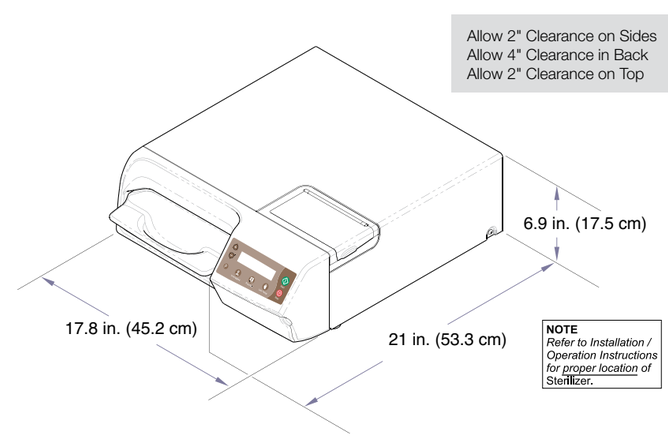

Dimensions: Integra™ Treatment Console

Integra™ FTC4472

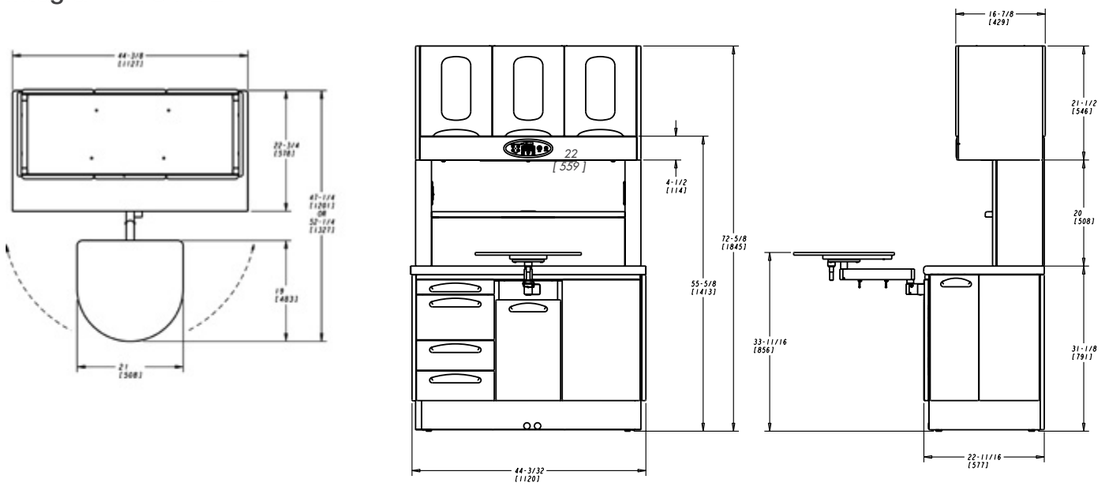

Integra™ FTC4452

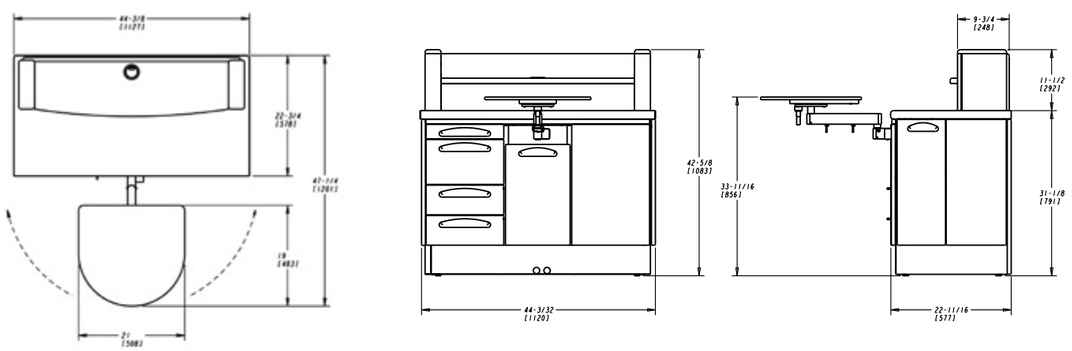

Dimensions: Integra™ Center Console

Integra™ FCC10672

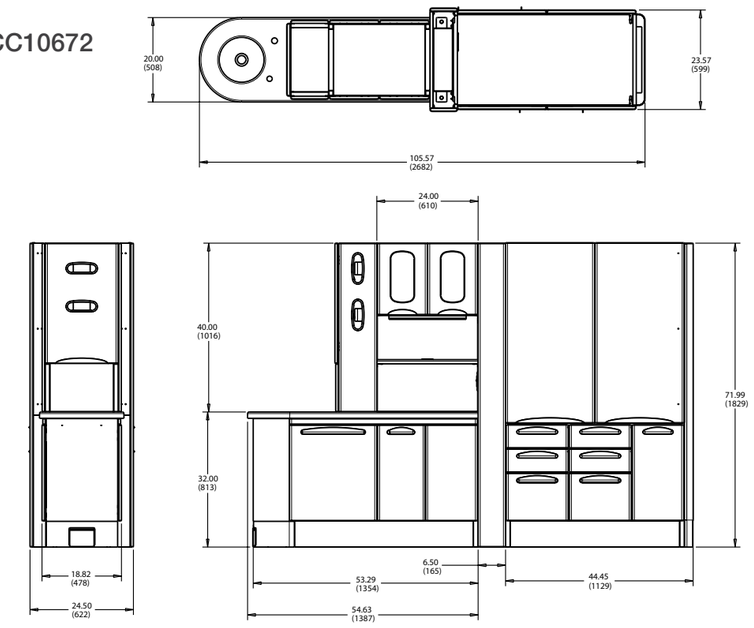

Integra™ FCC10690

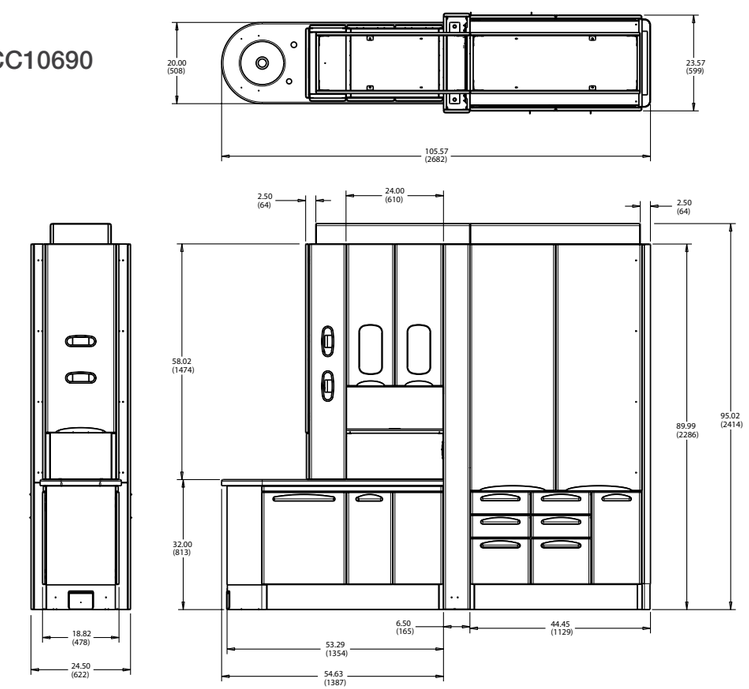

Dimensions: Integra™ Center Console

Integra™ FCC11272

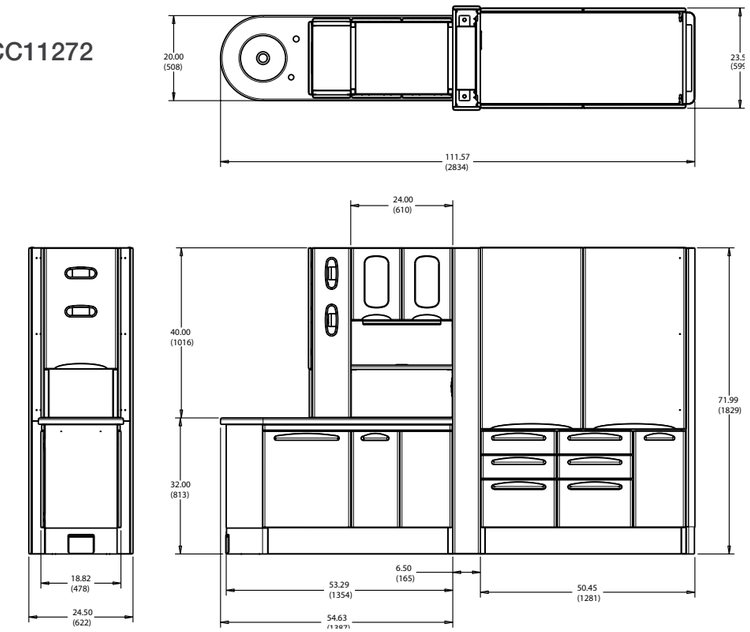

Integra™ FCC11290

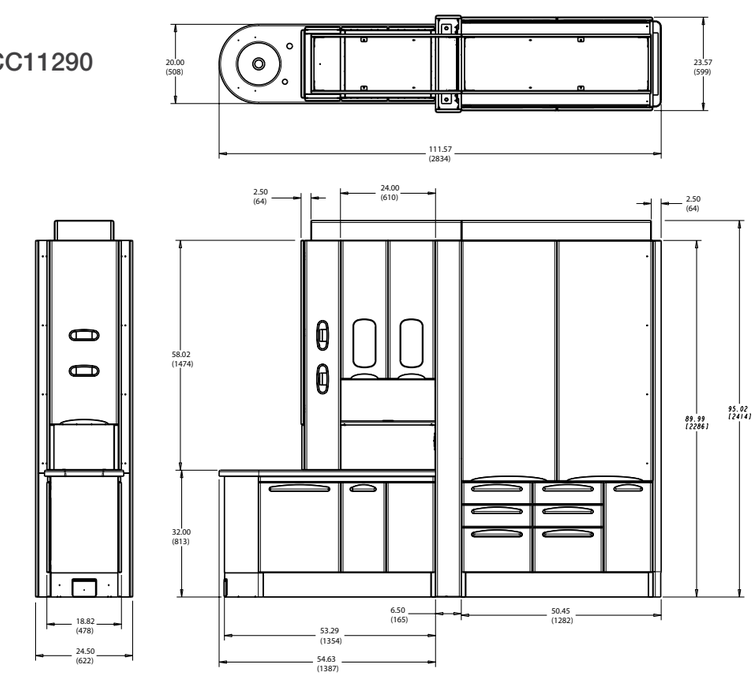

Dimensions: Artizan® Expressions Treatment Station

70 Series

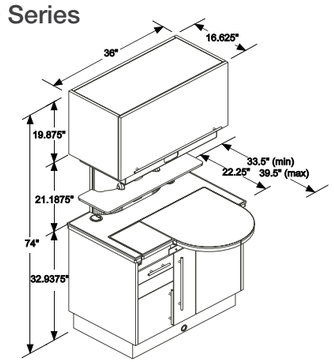

TS3670

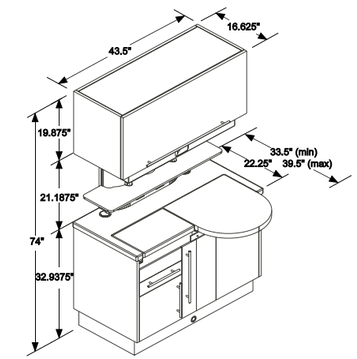

TS4370

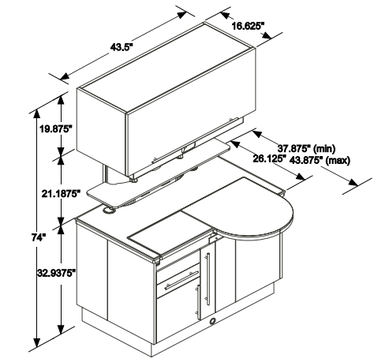

TS4375

80 Series

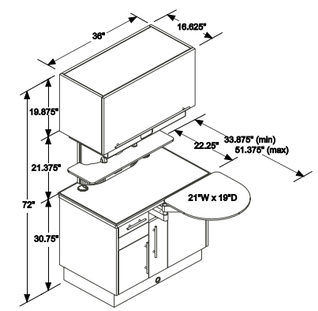

TS3680

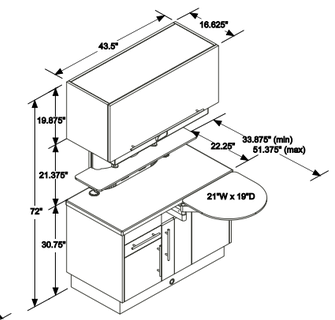

TS4380

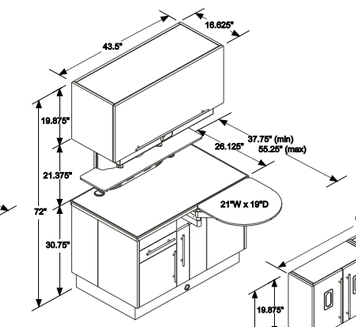

TS4385

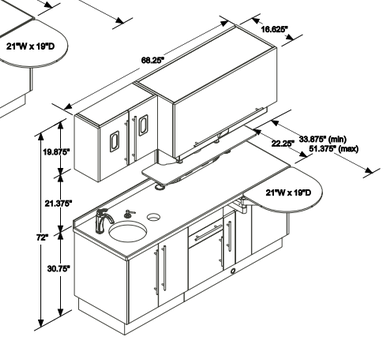

Expansion

90 Series

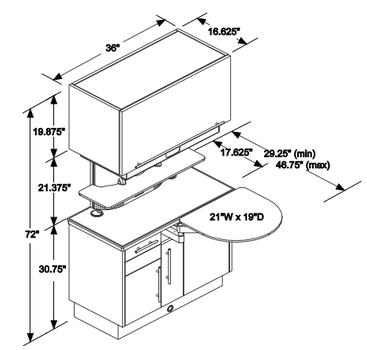

TS3690

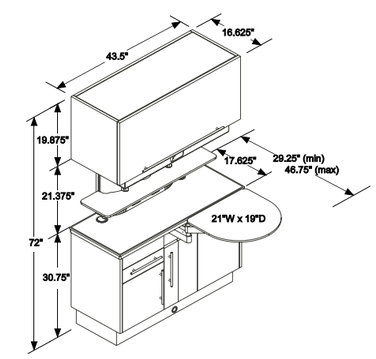

TS4390

Dimensions: Artizan® Expressions Echelon Console and Central Station

Echelon Console

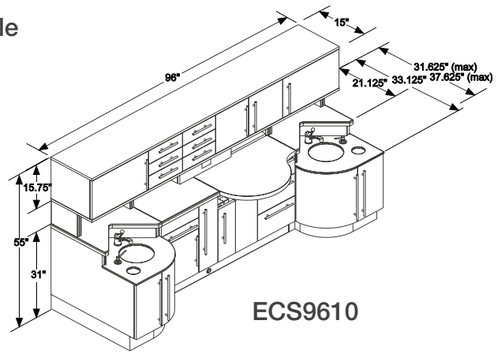

ECS9610

Central Station

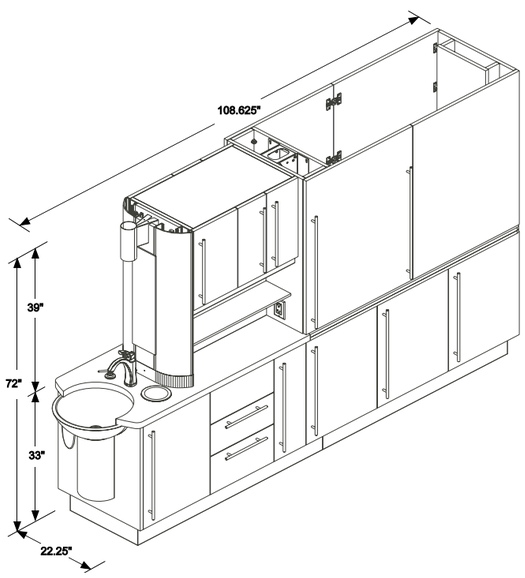

CS109

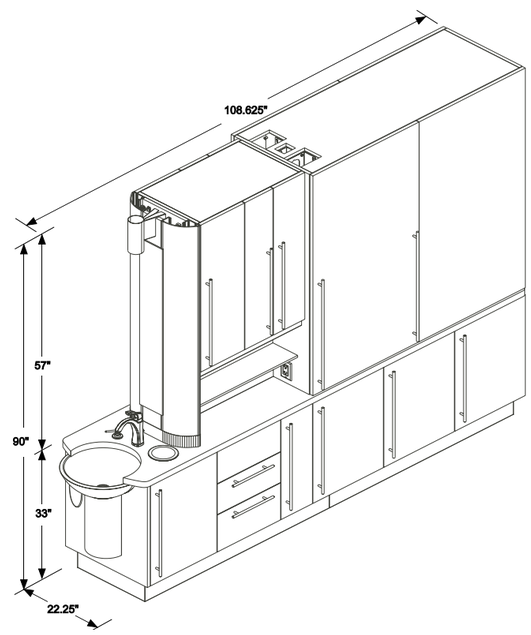

CS109-TB

Dimensions: Artizan® Expressions Side Station

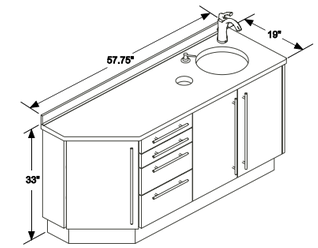

SS5800

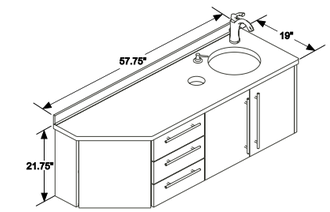

WHSS5800

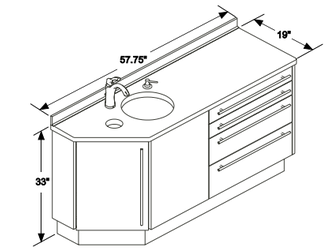

SS5810

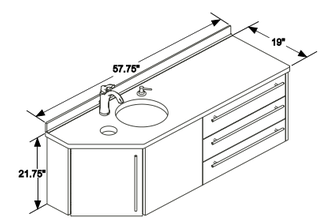

WHSS5810

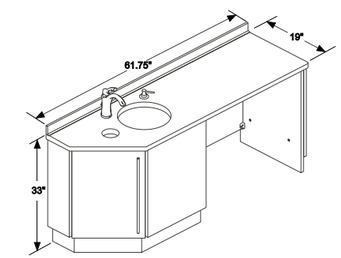

SS6210

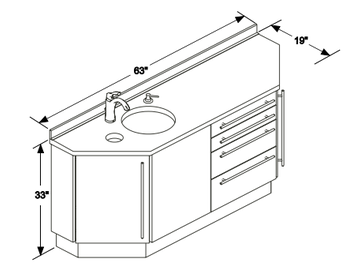

SS6310

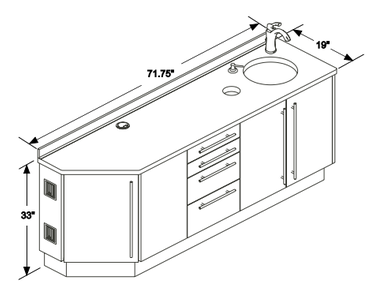

SS7200

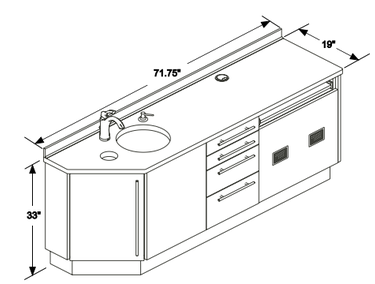

SS7210

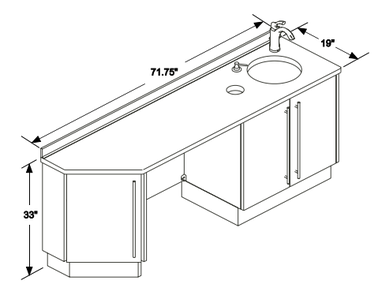

SS7300

Dimensions: Artizan® Expressions Ortho Cabinet/Cart

Ortho Cabinet/Cart

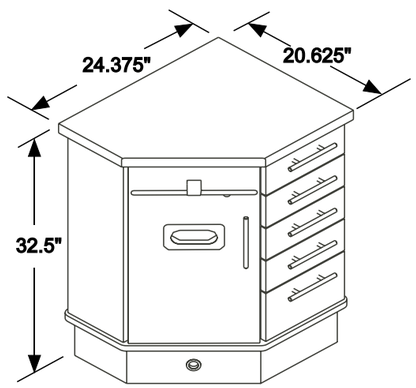

OC2421

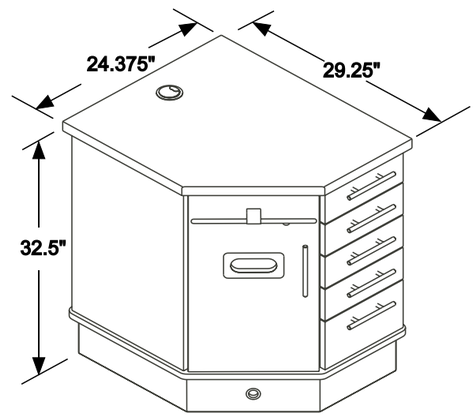

OC2429

Dimensions: Sample Layout of Four Operatory Office

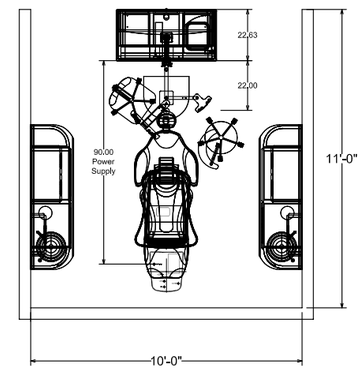

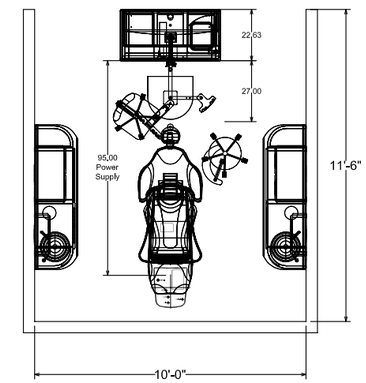

Shown below

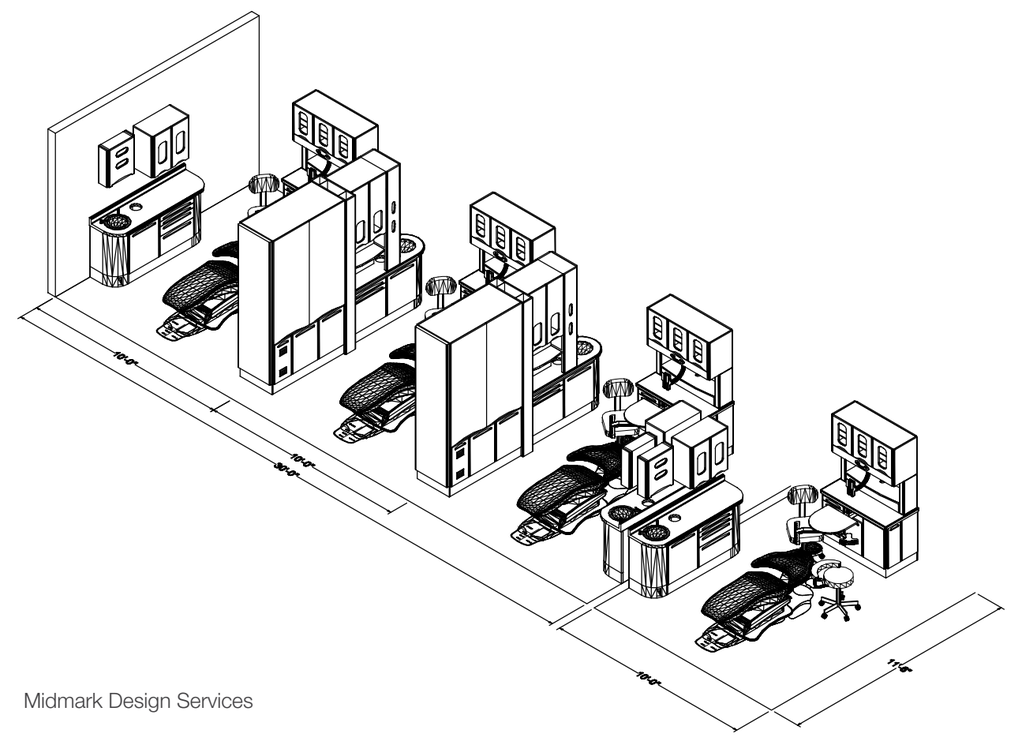

Midmark Design Services

Notes

Notes

Notes

For more information or a demonstration, contact your Midmark dealer or call: 1-800-MIDMARK Fax: 1-877-725-6495 or visit our website at midmark.com

CARB 93120.2 Phase 2 Compliant

Operatory Packages, Chairs, Delivery Systems, Lighting, Seating, Oral Surgery Products, Integra™ Cabinetry, Sterilization Casework, Instrument Processing, Air Compressors and Vacuums - Midmark Corporation, Versailles, OH 1-800-MIDMARK

Artizan® Expressions Cabinetry - Midmark Corporation, Glasgow, KY 1-800-257-7407

Imaging - Midmark Corporation, Lincolnshire, IL 1-847-415-9800

Ultrasonic Cleaners manufactured by Branson, Danbury, CT 1-800-732-9262 for distribution by Midmark Corporation.

Ultrasonic Cleaning Solutions manufactured by Diversified Chemical Products Inc., Wilmington, DE 1-800-320-0081 for distribution by Midmark Corporation.

Beakers manufactured by Kimble Chase Life Science and Research Products LLC, Rockwood, TN 1-800-451-4351 for distribution by Midmark Corporation.

Beaker Lids manufactured by Creative Plastics, Jackson Center, OH 937-596-6769 for distribution by Midmark Corporation.

Sopro Cameras, Satelec® Scaler and Curing Light manufactured by Acteon for distribution by Midmark Corporation.

Cavitron Scaler manufactured by Dentsply for distribution by Midmark Corporation.

MX2 electric motor manufactured by Bien Air for distribution by Midmark Corporation.

© 2015 Midmark Corporation
60 Vista Drive Versailles, Ohio 45380
Products subject to improvement changes without notice
Litho in U.S.A. 007-0271-00 Rev. O1 (3/15)

MIDMARK®

Because we care.